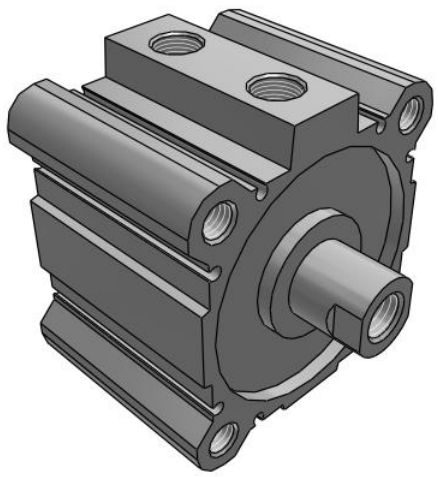

C(D)Q2W, Compact Cylinder, Double Acting Double Rod w/Auto Switch Mounting Groove

CDQ2WA80TF-15DZ

Datasheet

General series information

- Double acting, double rod, compact cylinder
- Bore sizes (mm): 12, 16, 20, 25, 32, 40, 50, 63, 80, 100
- Standard stroke range (mm): 5 to 100
- Port threads: M (12 to 25 bore); Rc, NPT or G (32 to 100 bore)
- Can mount small auto switches on 4 surfaces.

Standard specifications

Magnet	D (Built-in)
Mounting	A (Both Ends Tapped)
Type	Standard
Bore Size	Ø80 mm
Port Thread Type	TF
Stroke	15 mm
Body Option	Standard (Rod End Female Thread)
Auto Switch Groove	Z (Auto Switch Mounting Grooves)
Auto Switch	No Switch
Lead Wire or Prewired Connector	0.5 m or none in the case of No Switch
Number	2 pcs. or None in the Case of No Switch
Rod End Options	None
Temperature Resistance	None
Low Speed	None
Made of Stainless Steel	None
Fluororubber Seal	None
Pressure medium	Compressed air
Number of pneumatic connections	2 pcs.

Specifications are subject to change without prior notice and any obligation on the part of the manufacturer.

SMC CORPORATION Zuazobidea 14, 01012, Vitoria-Gasteiz, Álava +34 945184100 +34 945184126 www.smc.eu support.marketingeurope@smc.com

Mode of operation of drive	Double acting
Weight	1.717 Kg

Specifications are subject to change without prior notice and any obligation on the part of the manufacturer.

SMC CORPORATION Zuazobidea 14, 01012, Vitoria-Gasteiz, Álava +34 945184100 +34 945184126 www.smc.eu support.marketingeurope@smc.com

Dimensions

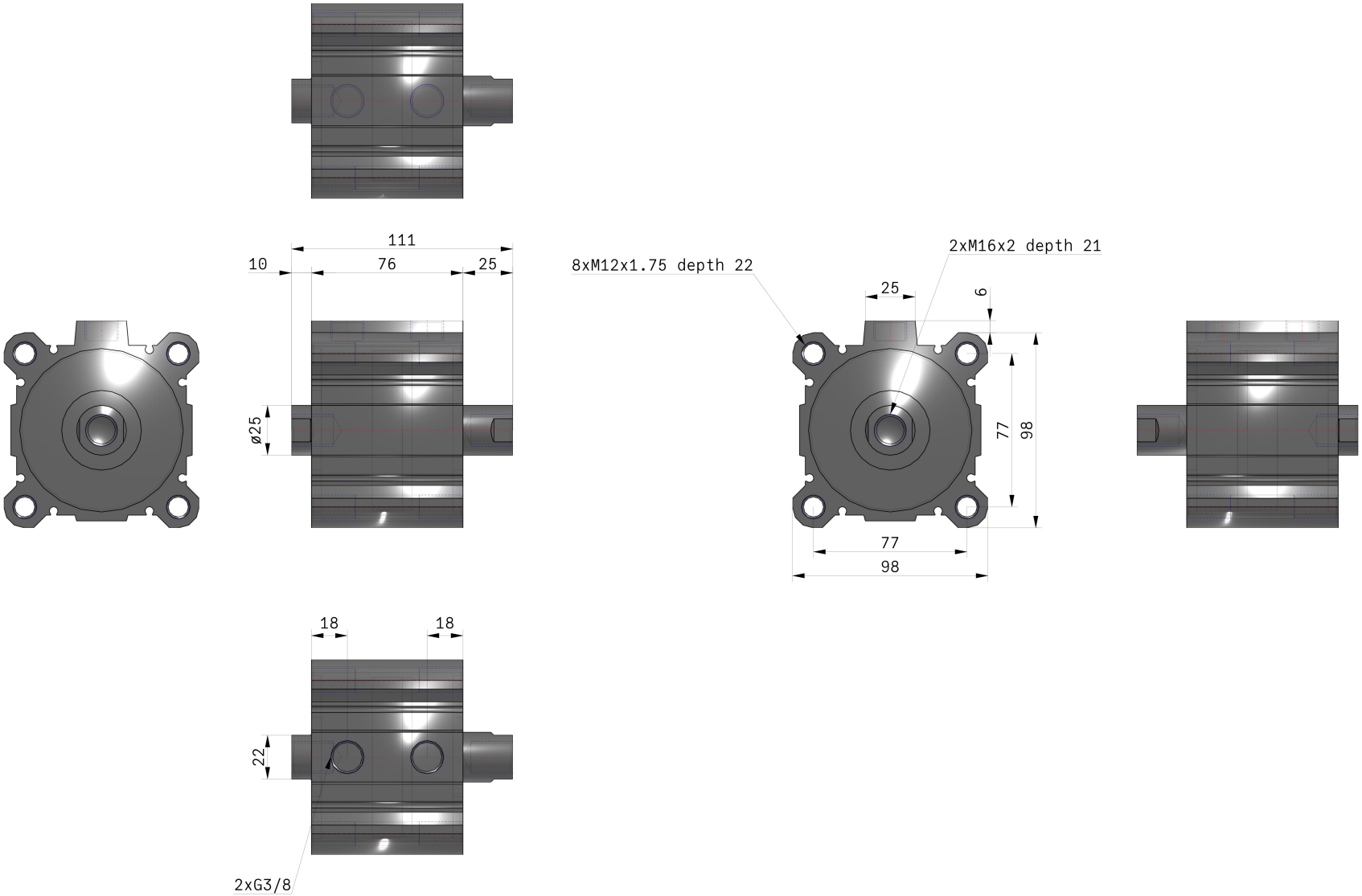

Specifications are subject to change without prior notice and any obligation on the part of the manufacturer.

SMC CORPORATION Zuazobidea 14, 01012, Vitoria-Gasteiz, Álava +34 945184100 +34 945184126 www.smc.eu support.marketingeurope@smc.com

Additional information

Catalogue	CQ2-Z-D_EU.pdf
Operation manuals	OM_CQ2x_OM0002MEN.pdf

Specifications are subject to change without prior notice and any obligation on the part of the manufacturer.

SMC CORPORATION Zuazobidea 14, 01012, Vitoria-Gasteiz, Álava +34 945184100 +34 945184126 www.smc.eu support.marketingeurope@smc.com