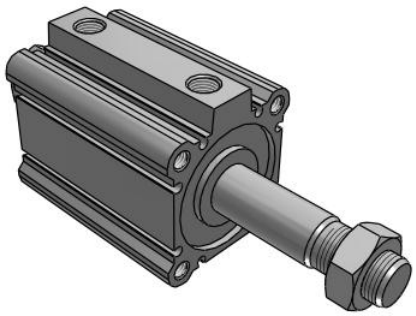

C(D)Q2KW, Compact Cylinder, Double Acting, Double Rod, Non-rotating w/Auto Switch Mounting Groove

CDQ2KWA50TF-40DMZ

Datasheet

General series information

- Double acting, double rod, non-rotating compact cylinder
- Bore sizes (mm): 12, 16, 20, 25, 32, 40, 50, 63
- Standard stroke range (mm): 5 to 100
- Port threads: M (12 to 25 bore); Rc, NPT or G (32 to 63 bore)
- Can mount small auto switches on 4 surfaces.

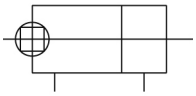

Double-acting cylinder with double piston rod

Standard specifications

Magnet	D (Built-in)
Mounting	A (Both Ends Tapped; 40 Through 63 Bore)
Bore Size	Ø50 mm
Port Thread	TF [G]
Stroke	40 mm
Body Option	M (Rod End Male Thread)
Auto Switch Groove	Z (Auto Switch Mounting Grooves)
Auto Switch	No Switch
Lead Wire or Pre-wired Connector	0.5 m (Or None in the Case of No Switch)
Number	2 pcs.
Rod End Options	None
Pressure medium	Compressed air
Maximum temperature of pressure medium	60 ºC
Minimum temperature of pressure medium	-10 °C [without condensation]
Maximum operating pressure	1.0 MPa
Minimum operating pressure	0,05 Mpa
Proof pressure	1.5 MPa
Maximum ambient temperature	60 ºC

Specifications are subject to change without prior notice and any obligation on the part of the manufacturer.

SMC CORPORATION Zuazobidea 14, 01012, Vitoria-Gasteiz, Álava +34 945184100 +34 945184126 www.smc.eu support.marketingeurope@smc.com

Minimum ambient temperature	-10 °C [without condensation]
Number of pneumatic connections	2 pcs.
Pneumatic input connection	G 1/4
Mode of operation of drive	Double acting
Theoretical cylinder force, advance stroke (at 0.5 MPa)	825 N
Theoretical cylinder force, return stroke (at 0.5 MPa)	825 N
Maximum piston speed	500 mm/s
Type of Stroke end	Double rod
Female thread of rod end	M10 x 1.5
Minimum piston speed	50 mm/s

Specifications are subject to change without prior notice and any obligation on the part of the manufacturer.

SMC CORPORATION Zuazobidea 14, 01012, Vitoria-Gasteiz, Álava +34 945184100 +34 945184126 www.smc.eu support.marketingeurope@smc.com

Dimensions

ø40～ø63 オートスイッチ付 (オートスイッチなしの場合はA, Bの寸法のみ変わりますので、寸法表をご参照ください。)

両端タップタイプ:CQ2KWA-CDQ2KWA

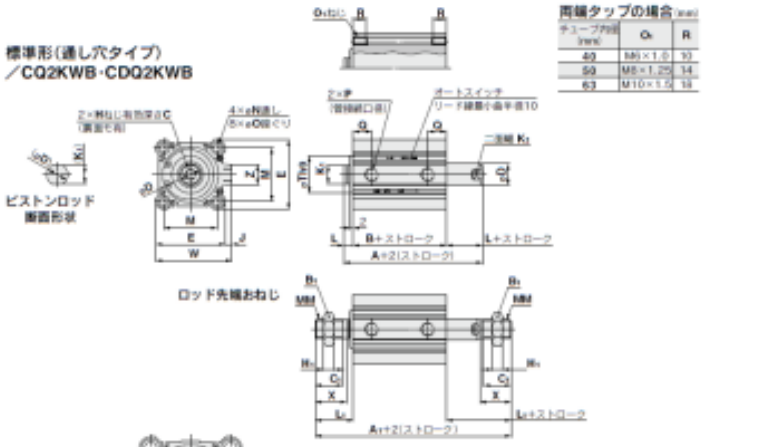

両端タップの場合 (mm)

チューブ内径 (mm)	Q₁	R
40	M6×1.0	10
50	M8×1.25	14
63	M10×1.5	18

ロッド先端おねじの場合 (mm)

チューブ内径 (mm)	ストローク範囲 (mm)	A₁ オートスイッチ付	A₁ オートスイッチ付	B₁	C₁	H₁	L₁	MM	X
40	5～50	97	107	22	20.5	8	28.5	M14×1.5	23.5
	75, 100	107							
50	10～50	107.5	117.5	27	26	11	33.5	M18×1.5	28.5
	75, 100	117.5							
63	10～50	109	119	27	26	11	33.5	M18×1.5	28.5
	75, 100	119							

ワンタッチ管継手内蔵形／ø40～ø63

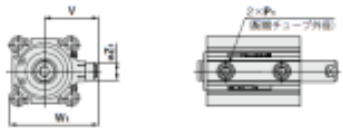

ワンタッチ管継手内蔵形 (mm)

チューブ内径 (mm)	Z₁	P₁	V	W₁
40	13	6	40.5	65.5
50	16	8	50	82
63	16	8	56.5	95

標準形 オートスイッチの適正取付位置・取付面寸法につきましてはP.954～960をご参照ください。 (mm)

チューブ内径 (mm)	ストローク範囲 (mm)	A オートスイッチ付	B オートスイッチ付	A オートスイッチ付	B オートスイッチ付	C	D	E	H	J	K₁	K₂	L	M	N	O	P	Q	Th9	W	Z
40	5～50	54	40	64	50	13	16	52	M8×1.25	5	14	14	7	40	5.5	9深7	1/8	12.5	28.$^{0}_{-0.052}$	57	15
	75,100	64	50																		
50	10～50	66.5	40.5	86.5	53.5	15	20	64	M10×1.5	7	18	17	8	50	6.6	11深8	1/4	14	35.$^{0}_{-0.062}$	71	19
	75,100	86.5	50.5																		
63	10～50	58	42	68	52	15	20	77	M10×1.5	7	18	17	8	60	9	14深10.5	1/4	15.5	35.$^{0}_{-0.062}$	84	19
	75,100	68	52																		

Specifications are subject to change without prior notice and any obligation on the part of the manufacturer.

SMC CORPORATION Zuazobidea 14, 01012, Vitoria-Gasteiz, Álava +34 945184100 +34 945184126 www.smc.eu support.marketingeurope@smc.com

Constructions

ø12 to ø25

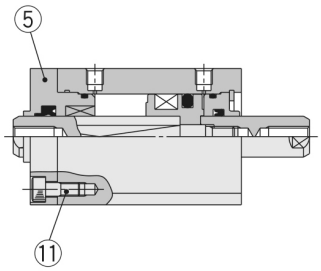

ø32

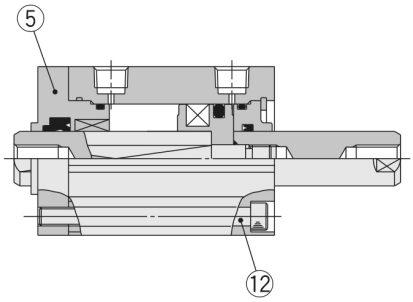

ø40 to ø63

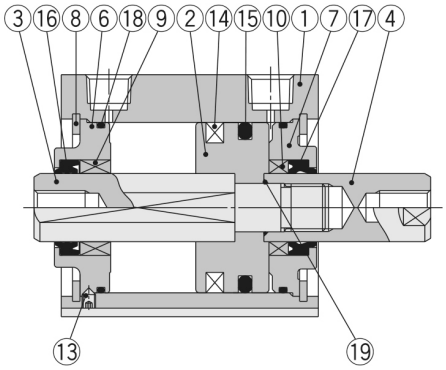

Component Parts

No.	Description	Material	Note
1	**Cylinder tube**	Aluminum alloy	Hard anodised
2	**Piston**	Aluminum alloy	Chromated
3	**Piston rod A**	Stainless steel	ø12 to ø25
		Carbon steel	ø32 to ø63, Hard chrome plated
4	**Piston rod B**	Stainless steel	ø12 to ø25
		Carbon steel	ø32 to ø63, Hard chrome plated
5	**Rod cover**	Brass	ø12, Electroless nickel plated
		Aluminum alloy	ø16 to ø32, Anodised
6	**Collar for non-rotating**	Aluminum alloy	ø40 to ø63, Anodised
7	**Collar**	Aluminum alloy	ø12 to ø40, Anodised
		Aluminum alloy casted	ø50 to ø63, Chromated, Painted
8	**Retaining ring**	Carbon tool steel	Phosphate coated
9	**Bushing for non-rotating**	Oil-impregnated sintered alloy	ø16 to ø63
10	**Bushing**	Bearing alloy	ø50, ø63
11	**Hexagon socket head cap screw**	Alloy steel	ø12 to ø25, Nickel plated
12	**Hexagon socket head cap screw**	Alloy steel	ø32, Nickel plated
13	**Hexagon socket head set screw**	Alloy steel	ø40 to ø63, Nickel plated
14	**Magnet**	—	

No.	Description	Material	Note
15	**Piston seal**	NBR	
16	**Rod seal for non-rotating**	NBR	
17	**Rod seal**	NBR	
18	**Gasket**	NBR	
19	**Piston gasket**	NBR	ø32 to ø63

Specifications are subject to change without prior notice and any obligation on the part of the manufacturer.

SMC CORPORATION Zuazobidea 14, 01012, Vitoria-Gasteiz, Álava +34 945184100 +34 945184126 www.smc.eu support.marketingeurope@smc.com

Additional information

Catalogue	CQ2-Z-D_EU.pdf
Operation manuals	OM_CQ2x_OM0002MEN.pdf

Specifications are subject to change without prior notice and any obligation on the part of the manufacturer.

SMC CORPORATION Zuazobidea 14, 01012, Vitoria-Gasteiz, Álava +34 945184100 +34 945184126 www.smc.eu support.marketingeurope@smc.com