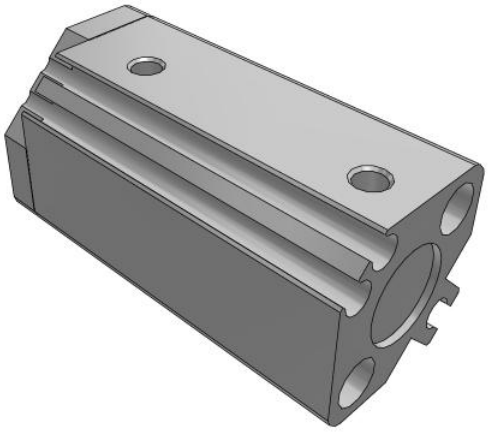

C(D)Q2K, Compact Cylinder, Double Acting, Single Rod, Non-rotating w/Auto Switch Mounting Groove

CDQ2KB12-25DCZ

Datasheet

General series information

- Double acting, single rod, non-rotating compact cylinder
- Bore sizes (mm): 12, 16, 20, 25, 32, 40, 50, 63
- Standard stroke range (mm): 5 to 100
- Port threads: M (12 to 25 bore); Rc, NPT or G (32 to 63 bore)
- Can mount small auto switches on 4 surfaces.

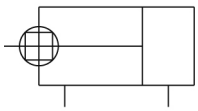

Double-acting, single-rod cylinder

Standard specifications

Magnet	D (Built-in)
Mounting	B (Through Hole [Standard; 12 through 63 Bore])
Bore Size	Ø12 mm
Port Thread Type	Rc (or M Thread for 16 & 20 Bore or 32 stroke 5mm)
Stroke	25
Body Option	C (Rubber Bumper)
Auto Switch Groove	Z [Auto Switch Mounting Grooves]
Auto Switch	No Switch
Lead Wire or Prewired Connector	0.5 m or None in the Case of No Switch
Number	2 pcs.
Rod End Options	None
Pressure medium	Compressed air
Maximum temperature of pressure medium	60 ºC
Minimum temperature of pressure medium	-10 °C [without condensation]
Maximum operating pressure	1.0 MPa
Minimum operating pressure	0.07 MPa
Proof pressure	1.5 MPa
Maximum ambient temperature	60 ºC

Specifications are subject to change without prior notice and any obligation on the part of the manufacturer.

SMC CORPORATION Zuazobidea 14, 01012, Vitoria-Gasteiz, Álava +34 945184100 +34 945184126 www.smc.eu support.marketingeurope@smc.com

Minimum ambient temperature	-10 °C [without condensation]
Number of pneumatic connections	2 pcs.
Pneumatic input connection	M5
Mode of operation of drive	Double acting
Theoretical cylinder force, advance stroke (at 0.5 MPa)	57 N
Theoretical cylinder force, return stroke (at 0.5 MPa)	42 N
Maximum piston speed	500 mm/s
Geometric form of the piston rod	Single rod
Male thread of rod end	M5 x 0.8
Female thread of rod end	M3 x 0.5
Minimum piston speed	50 mm/s
Weight	0.100 Kg

Specifications are subject to change without prior notice and any obligation on the part of the manufacturer.

SMC CORPORATION Zuazobidea 14, 01012, Vitoria-Gasteiz, Álava +34 945184100 +34 945184126 www.smc.eu support.marketingeurope@smc.com

Dimensions

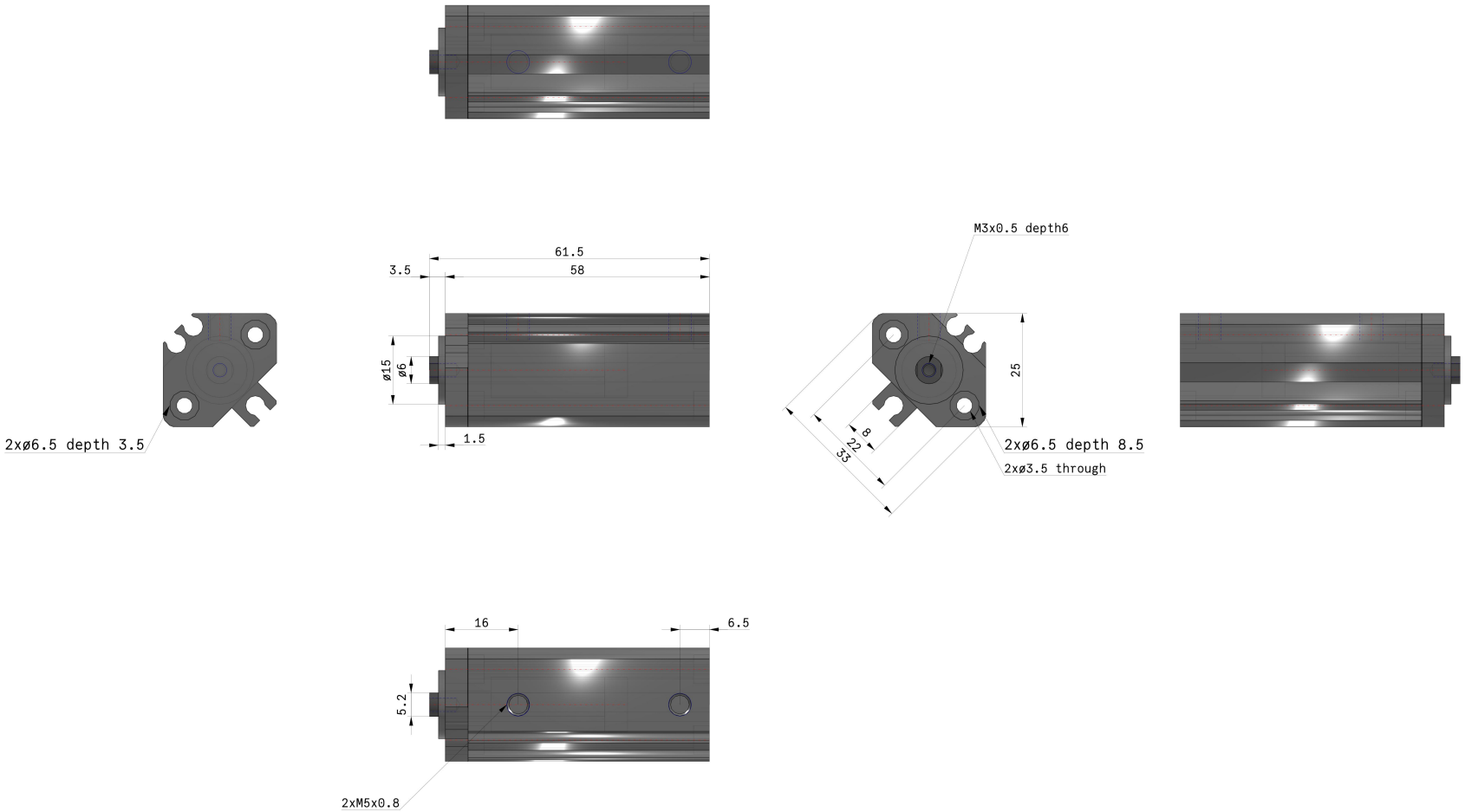

Specifications are subject to change without prior notice and any obligation on the part of the manufacturer.

SMC CORPORATION Zuazobidea 14, 01012, Vitoria-Gasteiz, Álava +34 945184100 +34 945184126 www.smc.eu support.marketingeurope@smc.com

Constructions

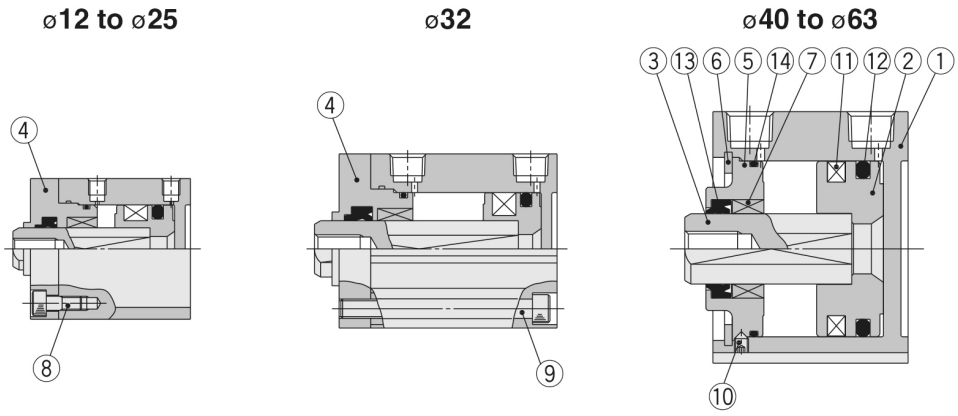

Component Parts

No.	Description	Material	Note
1	**Cylinder tube**	Aluminum alloy	Hard anodised
2	**Piston**	Aluminum alloy	Chromated
3	**Piston rod**	Stainless steel	ø12 to ø25
		Carbon steel	ø32 to ø63, Hard chrome plated
4	**Rod cover**	Brass	ø12, Electroless nickel plated
		Aluminum alloy	ø16 to ø32, Anodised
5	**Collar**	Aluminum alloy	ø40 to ø63, Anodised
6	**Retaining ring**	Carbon tool steel	Phosphate coated
7	**Bushing**	Oil-impregnated sintered alloy	ø16 to ø63
8	Hexagon socket head cap screw	Alloy steel	ø12 to ø25, Nickel plated
9	Hexagon socket head cap screw	Alloy steel	ø32, Nickel plated
10	Hexagon socket head set screw	Alloy steel	ø40 to ø63, Nickel plated
11	**Magnet**	—	
12	**Piston seal**	NBR	
13	**Rod seal**	NBR	
14	**Tube gasket**	NBR	

Specifications are subject to change without prior notice and any obligation on the part of the manufacturer.

SMC CORPORATION Zuazobidea 14, 01012, Vitoria-Gasteiz, Álava +34 945184100 +34 945184126 www.smc.eu support.marketingeurope@smc.com

Additional information

Catalogue	CQ2-Z-D_EU.pdf
Operation manuals	OM_CQ2x_OM0002MEN.pdf

Specifications are subject to change without prior notice and any obligation on the part of the manufacturer.

SMC CORPORATION Zuazobidea 14, 01012, Vitoria-Gasteiz, Álava +34 945184100 +34 945184126 www.smc.eu support.marketingeurope@smc.com