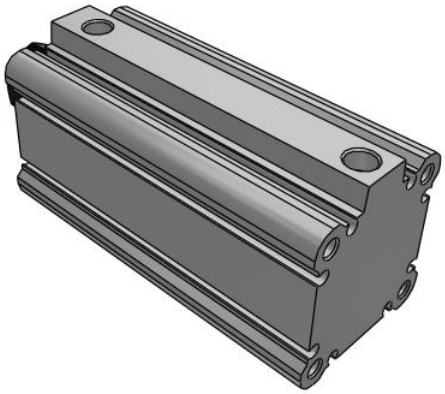

# C(D)Q2K, Compact Cylinder, Double Acting, Single Rod, Non-rotating w/Auto Switch Mounting Groove

CDQ2KA40TF-75DMZ

Datasheet

## General series information

- Double acting, single rod, non-rotating compact cylinder
- Bore sizes (mm): 12, 16, 20, 25, 32, 40, 50, 63
- Standard stroke range (mm): 5 to 100
- Port threads: M (12 to 25 bore); Rc, NPT or G (32 to 63 bore)
- Can mount small auto switches on 4 surfaces.

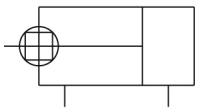

*Double-acting, single-rod cylinder*

## Standard specifications

| | |
|---|---|
| Magnet | D (Built-in) |
| Mounting | A (Both Ends Tapped; 40 Through 63 Bore) |
| Bore Size | Ø40 mm |
| Port Thread Type | TF (G) |
| Stroke | 75 |
| Body Option | M (Rod End Male Thread) |
| Auto Switch Groove | Z [Auto Switch Mounting Grooves] |
| Auto Switch | No Switch |
| Lead Wire or Prewired Connector | 0.5 m or None in the Case of No Switch |
| Number | 2 pcs. |
| Rod End Options | None |
| Pressure medium | Compressed air |
| Maximum temperature of pressure medium | 60 ºC |
| Minimum temperature of pressure medium | -10 °C [without condensation] |
| Maximum operating pressure | 1.0 MPa |
| Minimum operating pressure | 0,05 MPa |
| Proof pressure | 1.5 MPa |
| Maximum ambient temperature | 60 ºC |

*Specifications are subject to change without prior notice and any obligation on the part of the manufacturer.*



**SMC CORPORATION** Zuazobidea 14, 01012, Vitoria-Gasteiz, Álava +34 945184100 +34 945184126 www.smc.eu support.marketingeurope@smc.com

| | |
|---|---|
| Minimum ambient temperature | -10 °C [without condensation] |
| Number of pneumatic connections | 2 pcs. |
| Pneumatic input connection | G 1/8 |
| Mode of operation of drive | Double acting |
| Theoretical cylinder force, advance stroke (at 0.5 MPa) | 628 N |
| Theoretical cylinder force, return stroke (at 0.5 MPa) | 528 N |
| Maximum piston speed | 500 mm/s |
| Geometric form of the piston rod | Single rod |
| Male thread of rod end | M14 x 1.5 |
| Female thread of rod end | M8 x 1.25 |
| Minimum piston speed | 50 mm/s |
| Weight | 0.700 Kg |

Specifications are subject to change without prior notice and any obligation on the part of the manufacturer.



SMC CORPORATION Zuazobidea 14, 01012, Vitoria-Gasteiz, Álava +34 945184100 +34 945184126 www.smc.eu support.marketingeurope@smc.com

# Dimensions

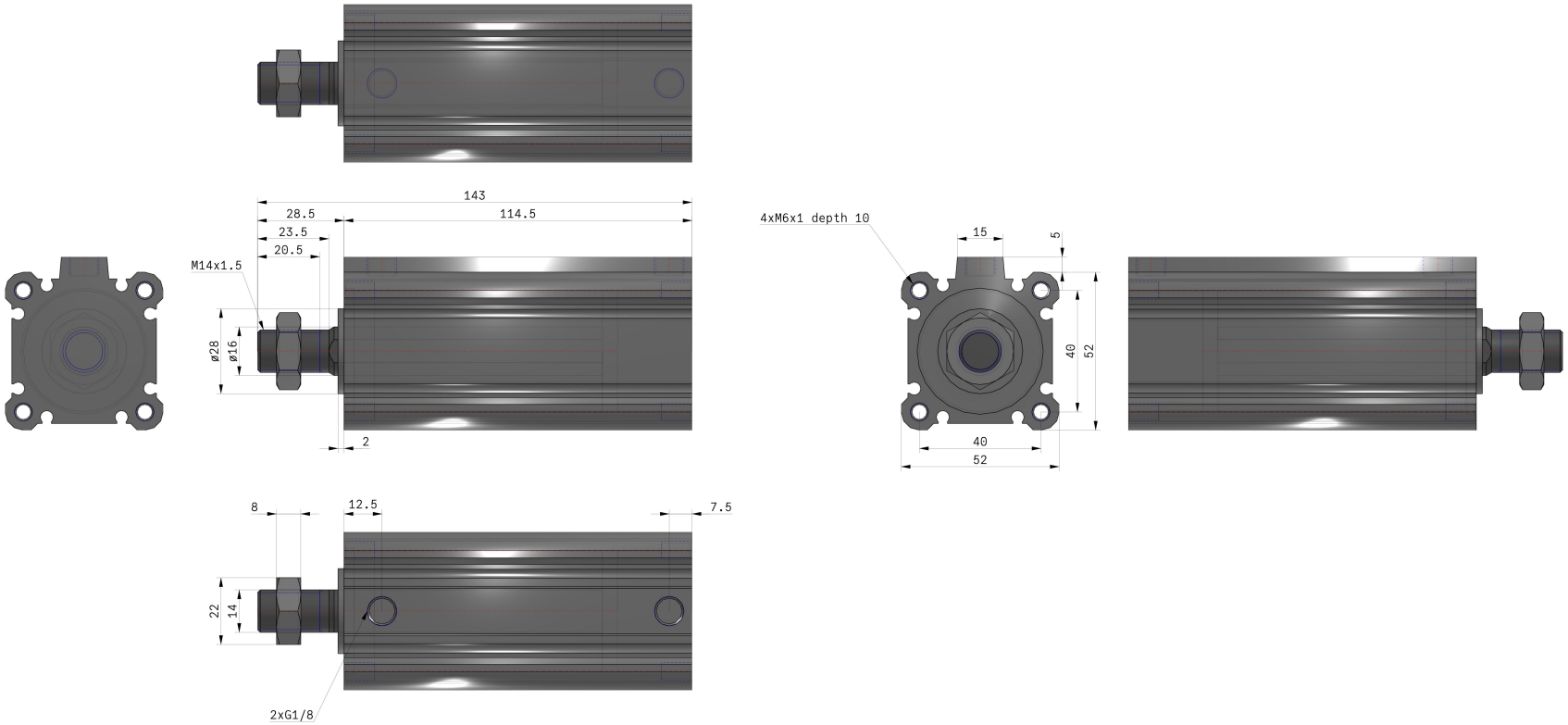


Specifications are subject to change without prior notice and any obligation on the part of the manufacturer.



SMC CORPORATION Zuazobidea 14, 01012, Vitoria-Gasteiz, Álava +34 945184100 +34 945184126 www.smc.eu support.marketingeurope@smc.com

# Constructions

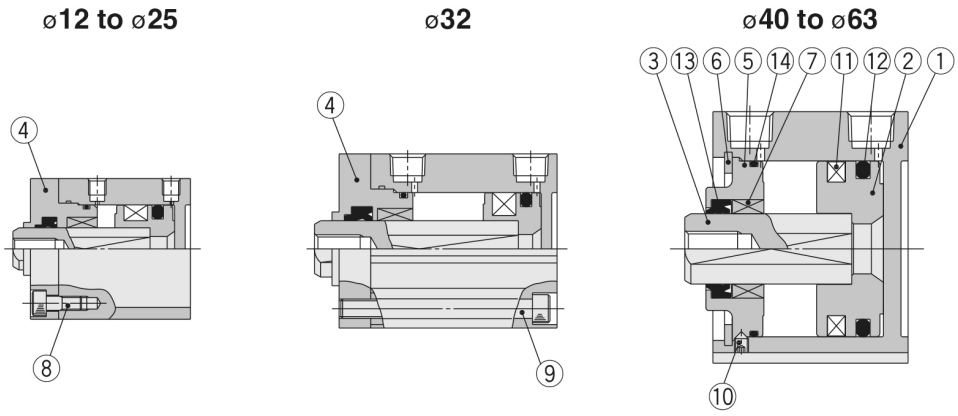


## Component Parts

| No. | Description | Material | Note |
|---|---|---|---|
| 1 | **Cylinder tube** | Aluminum alloy | Hard anodised |
| 2 | **Piston** | Aluminum alloy | Chromated |
| 3 | **Piston rod** | Stainless steel | ø12 to ø25 |
| | | Carbon steel | ø32 to ø63, Hard chrome plated |
| 4 | **Rod cover** | Brass | ø12, Electroless nickel plated |
| | | Aluminum alloy | ø16 to ø32, Anodised |
| 5 | **Collar** | Aluminum alloy | ø40 to ø63, Anodised |
| 6 | **Retaining ring** | Carbon tool steel | Phosphate coated |
| 7 | **Bushing** | Oil-impregnated sintered alloy | ø16 to ø63 |
| 8 | Hexagon socket head cap screw | Alloy steel | ø12 to ø25, Nickel plated |
| 9 | Hexagon socket head cap screw | Alloy steel | ø32, Nickel plated |
| 10 | Hexagon socket head set screw | Alloy steel | ø40 to ø63, Nickel plated |
| 11 | **Magnet** | — | |
| 12 | **Piston seal** | NBR | |
| 13 | **Rod seal** | NBR | |
| 14 | **Tube gasket** | NBR | |

*Specifications are subject to change without prior notice and any obligation on the part of the manufacturer.*



**SMC CORPORATION** Zuazobidea 14, 01012, Vitoria-Gasteiz, Álava +34 945184100 +34 945184126 www.smc.eu support.marketingeurope@smc.com

## Additional information

| | |
|---|---|
| Catalogue | CQ2-Z-D_EU.pdf |
| Operation manuals | OM_CQ2x_OM0002MEN.pdf |

Specifications are subject to change without prior notice and any obligation on the part of the manufacturer.



SMC CORPORATION Zuazobidea 14, 01012, Vitoria-Gasteiz, Álava +34 945184100 +34 945184126 www.smc.eu support.marketingeurope@smc.com