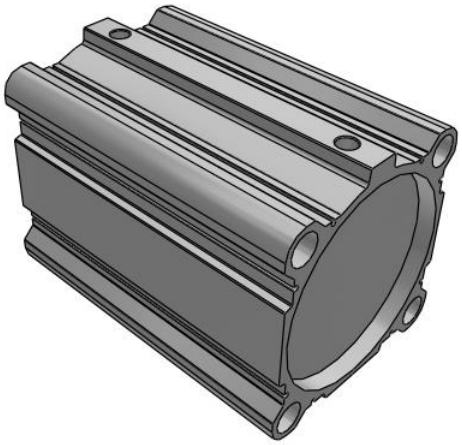

C(D)Q2, Compact Cylinder, Double Acting, Single Rod, Large Bore w/Auto Switch Mounting Groove

CDQ2B160TF-175DCMZ

Datasheet

General series information

- Compact, double acting, single rod, large bore
- Bore sizes (mm): 125, 140, 160, 180, 200
- Standard stroke range (mm): 10 to 300
- Port threads: Rc, NPT, G
- Can mount small auto switches on 4 surfaces.

Double-acting, single-rod cylinder

Standard specifications

Magnet	D (Built-in)
Bore Size	Ø160 mm
Port Thread	TF (G)
Stroke	175
Body Option	M (Rod End Male Thread)
Auto Switch	No Switch
Lead Wire or Pre-wired Connector	0.5 m (Or None in the Case of No Switch)
Number	2 pcs.
Rod End Options	None
Fluororubber Seal	None
Pressure medium	Compressed air
Maximum temperature of pressure medium with magnet	60 ºC
Minimum temperature of pressure medium with magnet	-10 °C
Maximum operating pressure	1.0 MPa
Minimum operating pressure	0.05 MPa
Proof pressure	1.5 MPa
Maximum ambient temperature with magnet	60 ºC
Minimum ambient temperature with magnet	-10 °C

Specifications are subject to change without prior notice and any obligation on the part of the manufacturer.

SMC CORPORATION Zuazobidea 14, 01012, Vitoria-Gasteiz, Álava +34 945184100 +34 945184126 www.smc.eu support.marketingeurope@smc.com

Number of pneumatic connections	2 pcs.
Pneumatic input connection	G 3/8
Mode of operation of drive	Double acting
Theoretical cylinder force, advance stroke (at 0.5 MPa)	10,053 N
Theoretical cylinder force, return stroke (at 0.5 MPa)	9,425 N
Maximum piston speed	500 mm/s
Piston rod end	Male thread
Geometric form of the piston rod	Single rod
Male thread of rod end	M36 x 1.5
Female thread of rod end	M24 x 3
Minimum piston speed	50 mm/s
Weight	14.070 Kg

Specifications are subject to change without prior notice and any obligation on the part of the manufacturer.

SMC CORPORATION Zuazobidea 14, 01012, Vitoria-Gasteiz, Álava +34 945184100 +34 945184126 www.smc.eu support.marketingeurope@smc.com

Dimensions

通し穴／CⓂQ2B

ø125～ø160

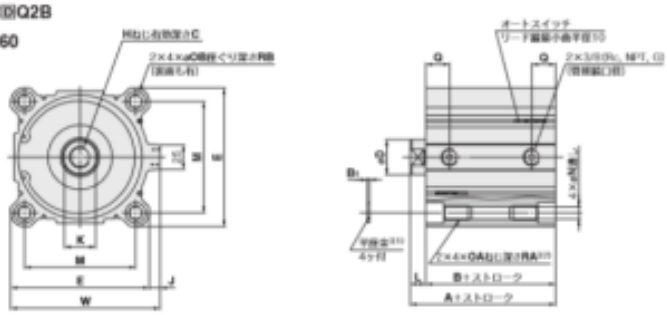

ø180, ø200

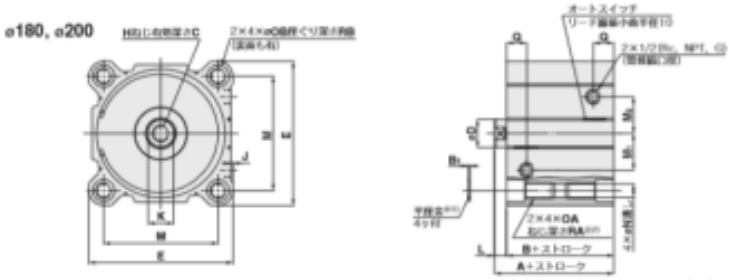

(mm)

チューブ内径 (mm)	標準ストローク範囲	A	B	B1	C	D	E	H	J	K	L	M	M1	M2	N	OA	OB	Q	RA	RB	W
125	10, 20, 30, 40, 50 75, 100, 125, 150 175, 200, 250, 300	96	83	2.5	30	36	142	M22×2.5	11	32	16	114	—	—	37.5	M14×2	21.2	24.5	25	18.4	153
140		96	83	2.5	30	36	154	M22×2.5	10	32	16	126	—	—	37.5	M14×2	21.2	24.5	25	18.4	168
160		106	91	2.5	33	40	176	M24×1	10	36	17	144	—	—	34.5	M16×2	24.2	27.5	26	21.2	188
180		116	100	3	33	40	204	M24×1	3	36	17	162	52	52	39	M20×2.5	31.5	29	38	26	—
200		126	108	3	33	40	226	M24×1	7.5	36	17	182	62	62	39	M20×2.5	31.5	30	38	26	—

注1) 通し穴でシリンダを取付ける際は、付属の平座金を必ずご使用ください。
注2) ø125～ø160のストローク50以下および(No.100), ø200のストローク50以下の場合は、OAねじ通しです。

ロッド先端おねじ

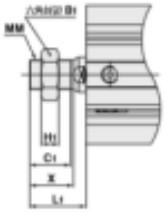

(mm)

チューブ内径 (mm)	B1	C1	H1	L1	MM	X
125	46	42	18	58	M30×1.5	45
140	46	42	18	58	M30×1.5	45
160	55	47	21	64	M36×1.5	50
180	55	47	21	64	M36×1.5	50
200	55	47	21	64	M36×1.5	50

※ロッド先端ナットの詳細につきましてはP.26

Specifications are subject to change without prior notice and any obligation on the part of the manufacturer.

SMC CORPORATION Zuazobidea 14, 01012, Vitoria-Gasteiz, Álava +34 945184100 +34 945184126 www.smc.eu support.marketingeurope@smc.com

Constructions

Standard

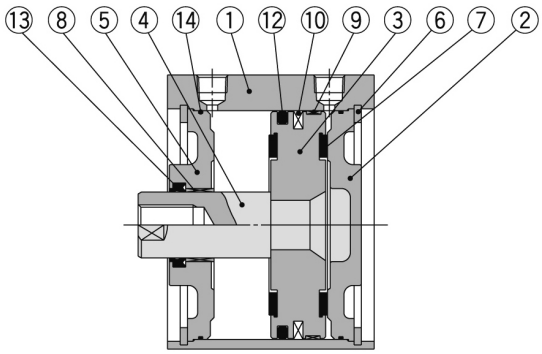

Rod end male thread

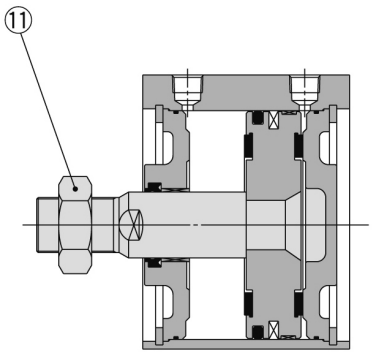

Component Parts

No.	Description	Material	Note
1	**Cylinder tube**	Aluminum alloy	Hard anodised
2	**Head cover**	Carbon steel	Nickel plated
3	**Piston**	Aluminum alloy	Chromated
4	**Piston rod**	Carbon steel	Hard chrome plated
5	**Rod cover**	Carbon steel	Nickel plated
6	**Retaining ring**	Carbon tool steel	Phosphate coated
7	**Bumper**	Urethane	
8	**Bushing**	Bearing alloy	
9	**Wear ring**	Resin	
10	**Magnet**	—	For CDQ2B□ only
11	**Rod end nut**	Carbon steel	Nickel plated
12	**Piston seal**	NBR	
13	**Rod seal**	NBR	
14	**Tube gasket**	NBR	

Replacement Parts/Seal Kit

Bore size (mm)	Kit no.	Contents
125	CQ2B125-PS	Kits include items ⑫, ⑬, ⑭ from the table.
140	CQ2B140-PS	
160	CQ2B160-PS	
180	CQ2B180-PS	
200	CQ2B200-PS	

∗ Seal kit includes ⑫, ⑬, ⑭. Order the seal kit, based on each bore size.
∗ Since the seal kit does not include a grease pack, order it separately.
Grease pack part no.: GR-S-010 (10 g)

Specifications are subject to change without prior notice and any obligation on the part of the manufacturer.

SMC CORPORATION Zuazobidea 14, 01012, Vitoria-Gasteiz, Álava +34 945184100 +34 945184126 www.smc.eu support.marketingeurope@smc.com

Additional information

Catalogue	CQ2-Z-D_EU.pdf
Operation manuals	OM_CQ2x_OM0002MEN.pdf

Specifications are subject to change without prior notice and any obligation on the part of the manufacturer.

SMC CORPORATION Zuazobidea 14, 01012, Vitoria-Gasteiz, Álava +34 945184100 +34 945184126 www.smc.eu support.marketingeurope@smc.com