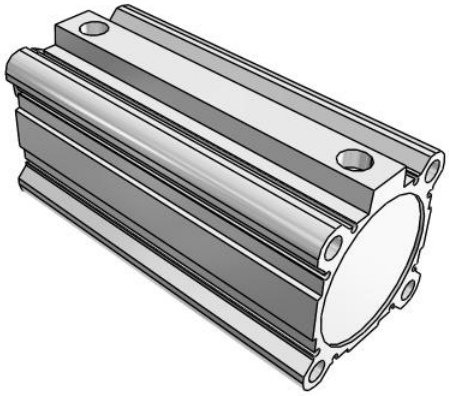

C(D)Q2, Compact Cylinder, Double Acting Single Rod, Long Stroke w/Auto Switch Mounting Groove

CDQ2A80TF-150DCMZ

Datasheet

General series information

- Compact Cylinder: Long Stroke Double Acting, Single Rod
- Bore sizes (mm): 32, 40, 50, 63, 80, 100
- Standard stroke range (mm): 125 to 300
- Port threads: Rc, NPT or G
- Can mount small auto switches on 4 surfaces.

Double-acting, single-rod cylinder

Standard specifications

Magnet	D (Built-in)
Mounting	A (Both Ends Tapped)
Type	Standard
Bore Size	Ø80 mm
Port Thread	TF [G]
Stroke	150
Cushion	C (Rubber Bumper)
Body Option	M (Rod End Male Thread)
Auto Switch	No Switch
Lead Wire or Pre-wired Connector	0.5 m (Or None in the Case of No Switch)
Number	2 pcs.
Rod End Options	None
Made of Stainless Steel	None
Fluororubber Seal	None
Pressure medium	Compressed air
Maximum temperature of pressure medium with magnet	60 ºC
Minimum temperature of pressure medium with magnet	-10 °C
Maximum operating pressure	1.0 MPa

Specifications are subject to change without prior notice and any obligation on the part of the manufacturer.

SMC CORPORATION Zuazobidea 14, 01012, Vitoria-Gasteiz, Álava +34 945184100 +34 945184126 www.smc.eu support.marketingeurope@smc.com

Minimum operating pressure	0.05 MPa
Proof pressure	1.5 MPa
Maximum ambient temperature with magnet	60 ºC
Minimum ambient temperature with magnet	-10 °C
Number of pneumatic connections	2 pcs.
Pneumatic input connection	G 3/8
Mode of operation of drive	Double acting
Maximum piston speed	500 mm/s
Type of cushioning	Elastically
Piston rod end	Male-Thread
Geometric form of the piston rod	Single rod
Male thread of rod end	M22 x 1.5
Female thread of rod end	M16 x 2.0
Minimum piston speed	50 mm/s
Weight	2.980 Kg

Specifications are subject to change without prior notice and any obligation on the part of the manufacturer.

SMC CORPORATION Zuazobidea 14, 01012, Vitoria-Gasteiz, Álava +34 945184100 +34 945184126 www.smc.eu support.marketingeurope@smc.com

Dimensions

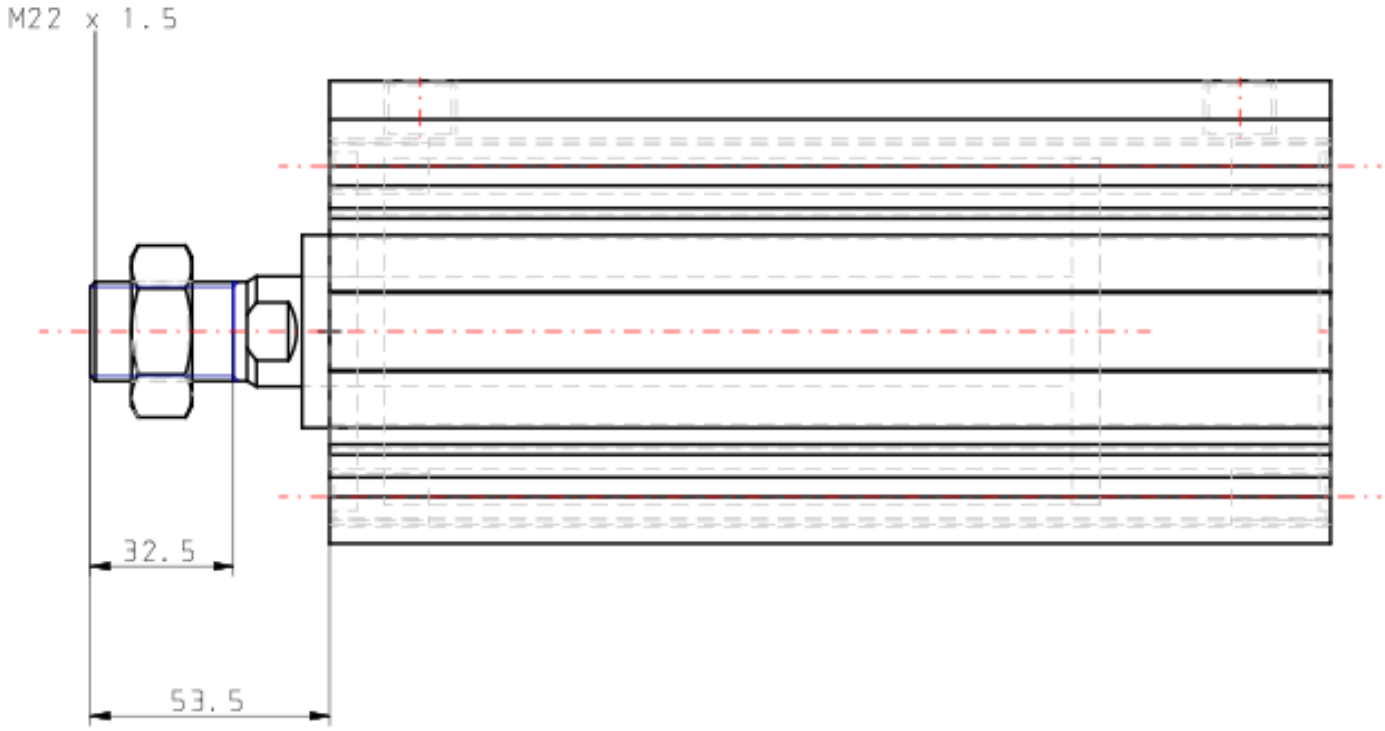

Specifications are subject to change without prior notice and any obligation on the part of the manufacturer.

SMC CORPORATION Zuazobidea 14, 01012, Vitoria-Gasteiz, Álava +34 945184100 +34 945184126 www.smc.eu support.marketingeurope@smc.com

Specifications are subject to change without prior notice and any obligation on the part of the manufacturer.

SMC CORPORATION Zuazobidea 14, 01012, Vitoria-Gasteiz, Álava +34 945184100 +34 945184126 www.smc.eu support.marketingeurope@smc.com

Constructions

Standard

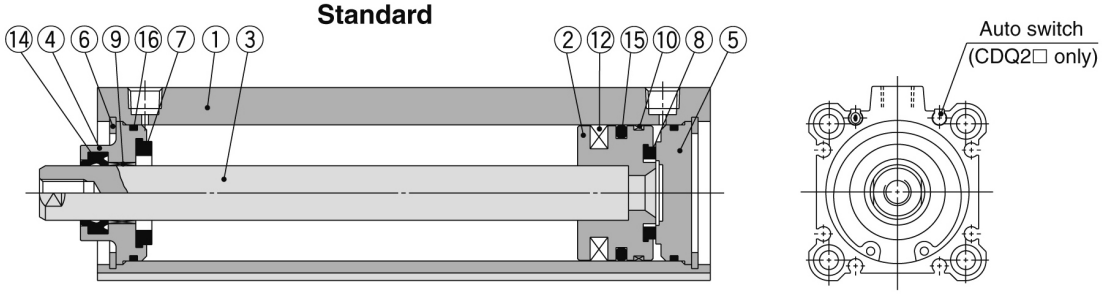

Rod end male thread

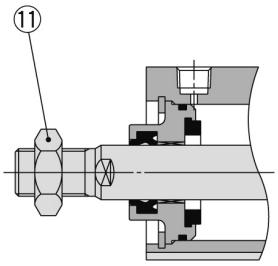

Built-in one-touch fittings

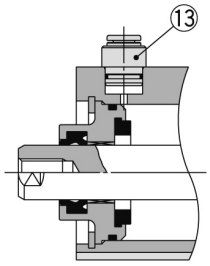

Component Parts

No.	Description	Material	Note
1	**Cylinder tube**	Aluminum alloy	Hard anodised
2	**Piston**	Aluminum alloy	Chromated
3	**Piston rod**	Carbon steel	Hard chrome plated
4	**Collar**	Aluminum alloy	Anodised
5	**Bottom plate**	Aluminum alloy	Anodised
6	**Retaining ring**	Carbon tool steel	Phosphate coated
7	**Bumper A**	Urethane	
8	**Bumper B**	Urethane	
9	**Bushing**	Bearing alloy	
10	**Wear ring**	Resin	
11	**Rod end nut**	Carbon steel	Nickel plated
12	**Magnet**	—	For CDQ2A□ only
13	**One-touch fitting**	—	ø32 to ø63
14 *	**Rod seal**	NBR	
15 *	**Piston seal**	NBR	
16 *	**Tube gasket**	NBR	

Replacement Parts/Seal Kit

Bore size (mm)	Kit no.	Contents
32	CQ2A32-L-PS	Kits include items ⑭, ⑮, ⑯ from the table.
40	CQ2A40-L-PS	
50	CQ2A50-L-PS	
63	CQ2A63-L-PS	
80	CQ2A80-L-PS	
100	CQ2A100-L-PS	

* Seal kit includes ⑭, ⑮, ⑯. Order the seal kit, based on each bore size.
* Since the seal kit does not include a grease pack, order it separately.
Grease pack part no.: GR-S-010 (10 g)

Specifications are subject to change without prior notice and any obligation on the part of the manufacturer.

SMC CORPORATION Zuazobidea 14, 01012, Vitoria-Gasteiz, Álava +34 945184100 +34 945184126 www.smc.eu support.marketingeurope@smc.com

Additional information

Catalogue	CQ2-Z-D_EU.pdf
Operation manuals	OM_CQ2x_OM0002MEN.pdf

Specifications are subject to change without prior notice and any obligation on the part of the manufacturer.

SMC CORPORATION Zuazobidea 14, 01012, Vitoria-Gasteiz, Álava +34 945184100 +34 945184126 www.smc.eu support.marketingeurope@smc.com