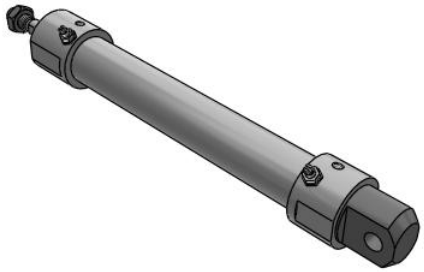

# C(D)G5-S, Stainless Steel Cylinder, Double Acting, Single Rod

CDG5EA20TFSV-100

Datasheet

## General series information

- Double acting, single rod CG5-S cylinder
- All stainless steel external parts
- Special scraper prevents water from entering cylinder
- Bore sizes (mm): 20, 25, 32, 40, 50, 63, 80 and 100
- Auto switch capability

## Standard specifications

| | |
|---|---|
| Magnet | D (Built-in) |
| Mounting | E (Integral Clevis) |
| Style | A (Non-lube Air Cushion) |
| Bore Size | 20mm |
| Thread | TF (M5 for Rubber Bumper 20 & 25 Bore) |
| Seal Material | V (FKM) |
| Stroke | 100 |
| Auto Switch | None |
| Lead Wire or Prewired Connector | 0.5m (Or None in the Case of No Switch) |
| Number | 2 pcs. (Or None in the Case of No Switch) |
| Rod End Options | None |
| Temperature Resistance | None |
| Pressure medium | Air |
| Number of pneumatic connections | 2 pcs. |
| Mode of operation of drive | Double acting |
| Geometric form of the piston rod | Round piston rod |
| Weight | 0.614 Kg |

Specifications are subject to change without prior notice and any obligation on the part of the manufacturer.



SMC CORPORATION Zuazobidea 14, 01012, Vitoria-Gasteiz, Álava +34 945184100 +34 945184126 www.smc.eu support.marketingeurope@smc.com

# Dimensions

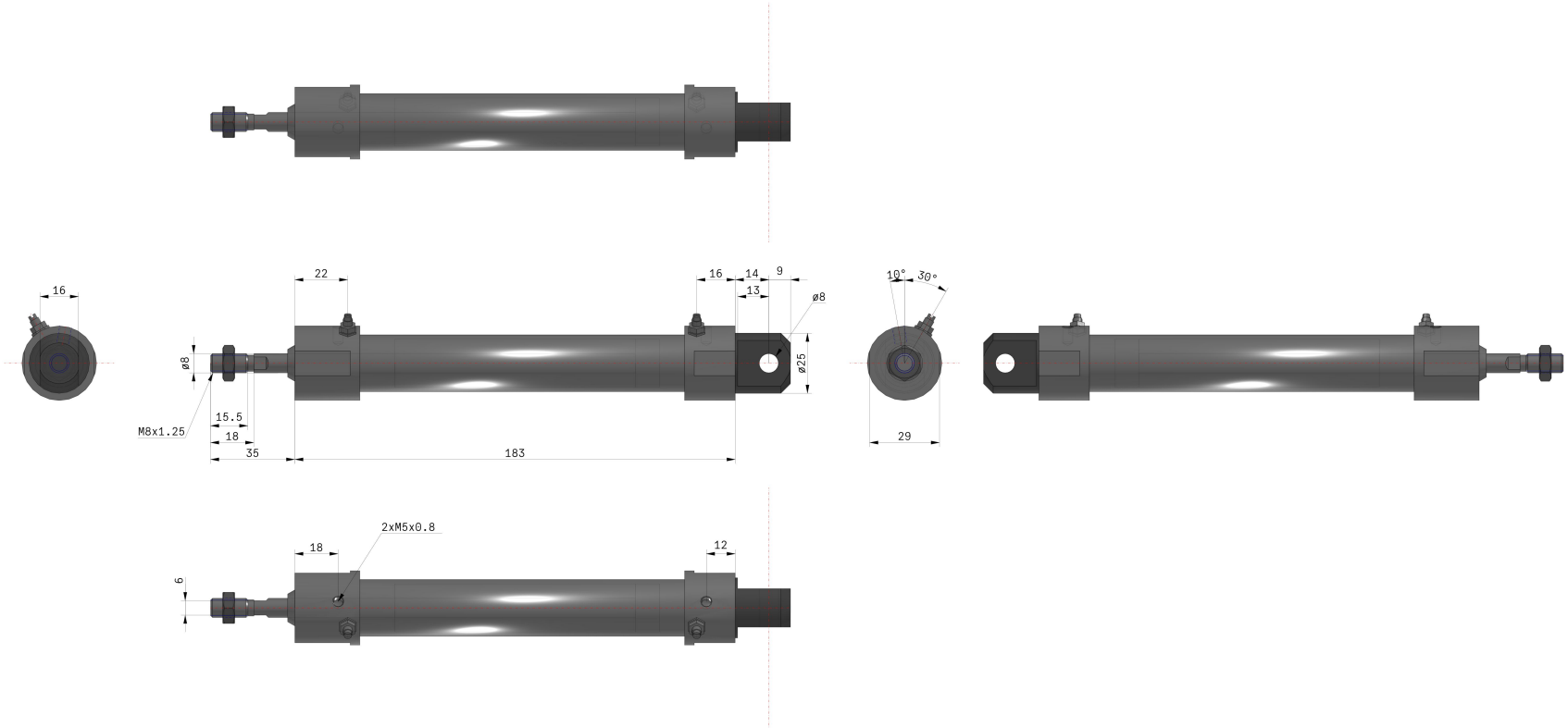


Specifications are subject to change without prior notice and any obligation on the part of the manufacturer.



**SMC CORPORATION** Zuazobidea 14, 01012, Vitoria-Gasteiz, Álava +34 945184100 +34 945184126 www.smc.eu support.marketingeurope@smc.com

## Additional information

| | |
|---|---|
| Catalogue | CJ5-CG5-B_EU.pdf |

Specifications are subject to change without prior notice and any obligation on the part of the manufacturer.



SMC CORPORATION Zuazobidea 14, 01012, Vitoria-Gasteiz, Álava +34 945184100 +34 945184126 www.smc.eu support.marketingeurope@smc.com