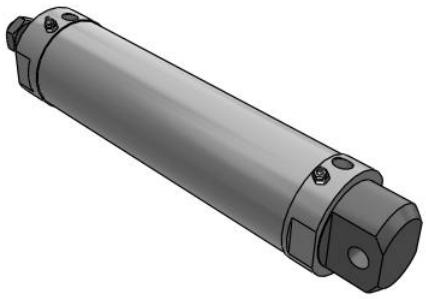

C(D)G5-S, Stainless Steel Cylinder, Double Acting, Single Rod

CDG5EA100TFSR-300

Datasheet

General series information

- Double acting, single rod CG5-S cylinder
- All stainless steel external parts
- Special scraper prevents water from entering cylinder
- Bore sizes (mm): 20, 25, 32, 40, 50, 63, 80 and 100
- Auto switch capability

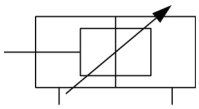

Double-acting cylinder with cushioning adjustable at both ends, single piston rod

Standard specifications

Magnet	D (Built-in)
Mounting	E (Integral Clevis)
Style	A (Non-lube Air Cushion)
Bore Size	100mm
Thread	TF (M5 for Rubber Bumper 20 & 25 Bore)
Seal Material	R (NBR)
Stroke	300
Auto Switch	None
Lead Wire or Prewired Connector	0.5m (Or None in the Case of No Switch)
Number	2 pcs. (Or None in the Case of No Switch)
Rod End Options	None
Temperature Resistance	None
Pressure medium	Air
Maximum temperature of pressure medium with magnet	60 ºC
Minimum temperature of pressure medium with magnet	-10 ºC
Maximum operating pressure	1.0 MPa
Minimum operating pressure	0.05 MPa
Proof pressure	1.5 MPa

Specifications are subject to change without prior notice and any obligation on the part of the manufacturer.

SMC CORPORATION Zuazobidea 14, 01012, Vitoria-Gasteiz, Álava +34 945184100 +34 945184126 www.smc.eu support.marketingeurope@smc.com

Maximum ambient temperature with magnet	60 ºC
Minimum ambient temperature with magnet	-10 ºC
Number of pneumatic connections	2 pcs.
Pneumatic input connection	G 1/2
Mode of operation of drive	Double acting
Maximum piston speed	700 mm/s
Piston rod end	External thread
Geometric form of the piston rod	Round piston rod
Male thread of rod end	M26 x 1.5
Minimum piston speed	50 mm/s
Weight	6.456 Kg

Specifications are subject to change without prior notice and any obligation on the part of the manufacturer.

SMC CORPORATION Zuazobidea 14, 01012, Vitoria-Gasteiz, Álava +34 945184100 +34 945184126 www.smc.eu support.marketingeurope@smc.com

Dimensions

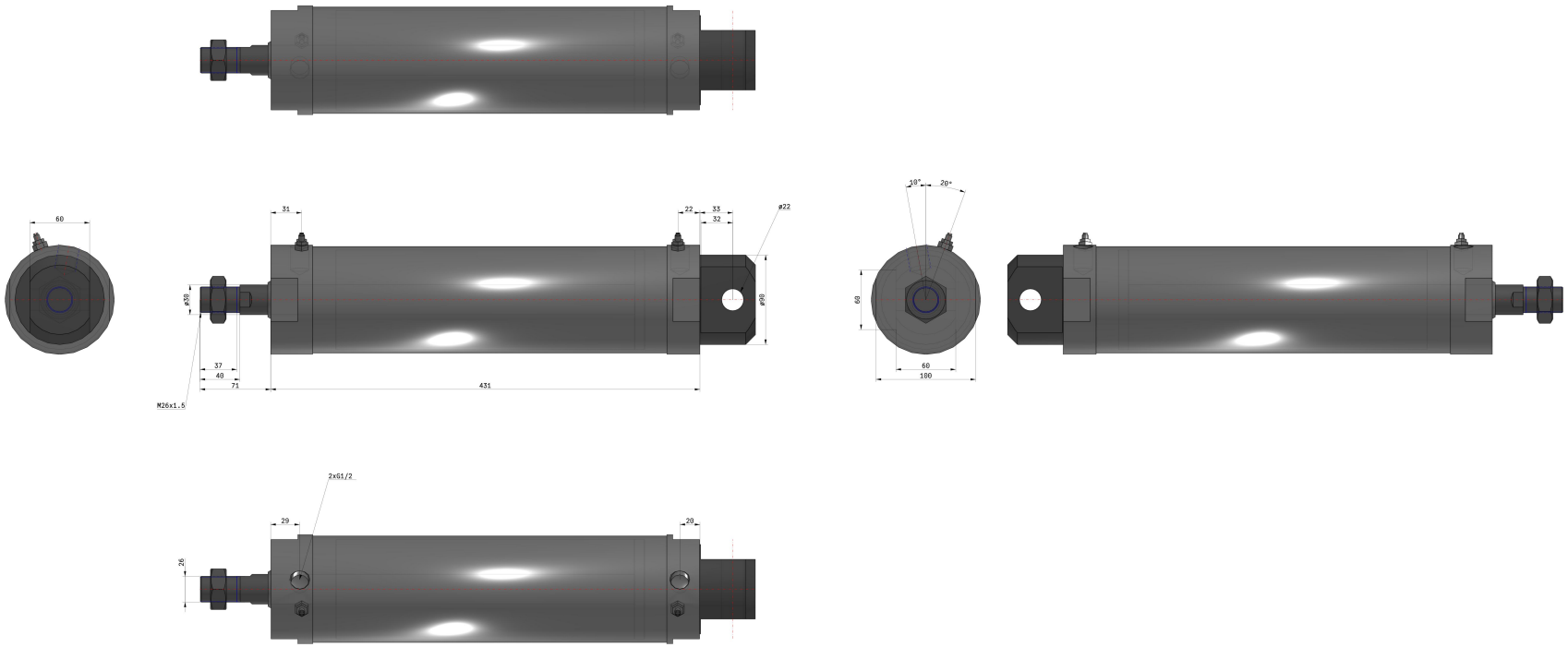

Specifications are subject to change without prior notice and any obligation on the part of the manufacturer.

SMC CORPORATION Zuazobidea 14, 01012, Vitoria-Gasteiz, Álava +34 945184100 +34 945184126 www.smc.eu support.marketingeurope@smc.com

Constructions

Construction

With air cushion

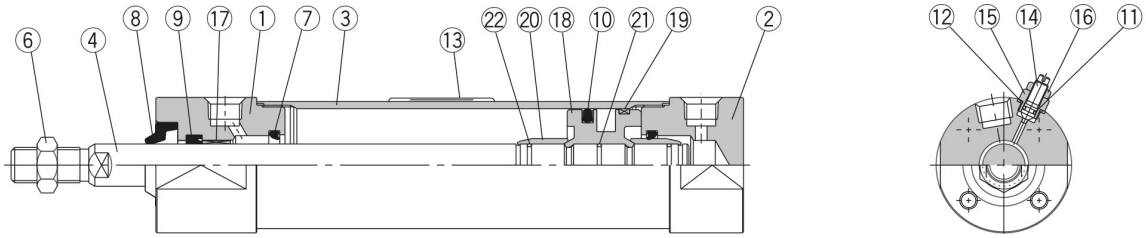

Component Parts

No.	Description	Material	
1	**Rod cover**	Stainless steel 304	
2	**Head cover**	Stainless steel 304	
3	**Cylinder tube**	Stainless steel 304	
4	**Piston rod**	Stainless steel 304	Hard chrome plated
6	**Rod end nut**	Stainless steel 304	
7	**Cushion seal**	Urethane	
14	**Cushion valve**	Stainless steel 304	
15	**Valve retainer**	Stainless steel 304	
16	**Lock nut**	Stainless steel 304	
17	**Bushing**	Bearing alloy	
18	**Piston**	Aluminium alloy	
19	**Wearing**	Resin	
20	**Cushion ring**	Aluminium alloy	

Note 1) Component part material and surface treatment other than listed above are the same as the standard type of Series CG1.
Note 2) For cylinders with an auto switch, the piston is fixed with a magnet.

No.	Description	Material	
		CG5□□□SR	**CG5□□□SV**
8	**Water resistant scraper**	NBR	FKM
9	**Rod seal**		
10	**Piston seal**		
11	**Valve seal**		
12	**Valve retainer gasket**		
21	**Piston gasket**		
22	**Cushion ring gasket**		
13	**Label protector**	PET	

Specifications are subject to change without prior notice and any obligation on the part of the manufacturer.

SMC CORPORATION Zuazobidea 14, 01012, Vitoria-Gasteiz, Álava +34 945184100 +34 945184126 www.smc.eu support.marketingeurope@smc.com

Additional information

Catalogue	CJ5-CG5-B_EU.pdf

Specifications are subject to change without prior notice and any obligation on the part of the manufacturer.

SMC CORPORATION Zuazobidea 14, 01012, Vitoria-Gasteiz, Álava +34 945184100 +34 945184126 www.smc.eu support.marketingeurope@smc.com