C(D)85W, ISO Cylinder, Double Acting, Double Rod

CD85WE8-80-B

Datasheet

General series information

- ISO cylinder, double acting, double rod
- Fluid: air
- Bore sizes (mm): 8, 10, 12, 16, 20, 25
- Strokes (mm): up to 300 (depending on bore)
- Auto switches available (order separate)

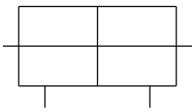

Double-acting cylinder with double piston rod

Standard specifications

Magnet	D (Built-in)
Bore Size	Ø8 mm
Stroke	80
Cushion	Rubber Cushion
Rod Boot	Standard
Switch Mounting	B (Band)
Auto Switch	No Switch
Lead Wire or Prewired Connector	0.5m (Or None in the Case of No Switch)
Number	2 pcs. (Or None in the Case of No Switch)
Rod End Options	None
Temperature Resistance	None
Made of Stainless Steel	None
Long Stroke	None
Pressure medium	Compressed Air
Maximum temperature of pressure medium with magnet	80°C
Minimum temperature of pressure medium with magnet	-20°C
Maximum operating pressure	1 MPa
Minimum operating pressure	0.1 MPa

Specifications are subject to change without prior notice and any obligation on the part of the manufacturer.

SMC CORPORATION Zuazobidea 14, 01012, Vitoria-Gasteiz, Álava +34 945184100 +34 945184126 www.smc.eu support.marketingeurope@smc.com

Proof pressure	1.5 MPa
Maximum ambient temperature with magnet	80°C
Minimum ambient temperature with magnet	-20°C
Number of pneumatic connections	2 pcs.
Pneumatic input connection	M5
Mode of operation of drive	Double acting
Maximum piston speed	1500 mm/s
Type of cushioning	Rubber bumper
Type of Stroke end	Double rod
Piston rod end	External thread
Male thread of rod end	M4
Weight	0.069 Kg

Specifications are subject to change without prior notice and any obligation on the part of the manufacturer.

SMC CORPORATION Zuazobidea 14, 01012, Vitoria-Gasteiz, Álava +34 945184100 +34 945184126 www.smc.eu support.marketingeurope@smc.com

Dimensions

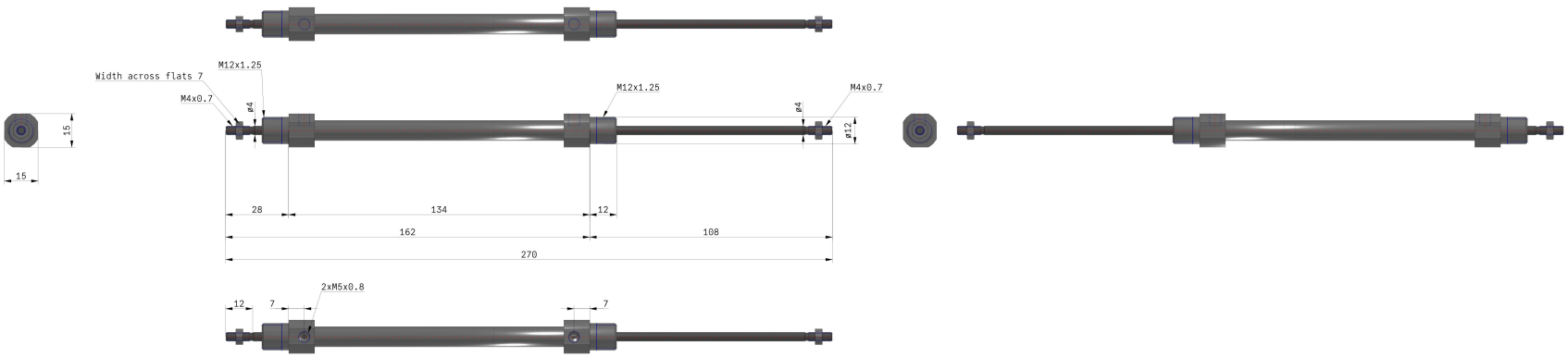

Specifications are subject to change without prior notice and any obligation on the part of the manufacturer.

SMC CORPORATION Zuazobidea 14, 01012, Vitoria-Gasteiz, Álava +34 945184100 +34 945184126 www.smc.eu support.marketingeurope@smc.com

Constructions

Double acting: Double rod
C□85WE 8 to 16 Rubber bumper (Disassembly is not possible)

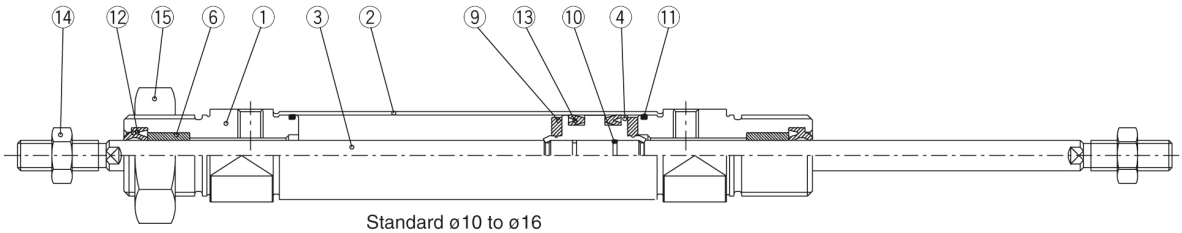

Standard ø10 to ø16

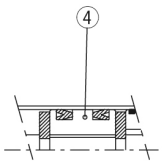

Standard ø8

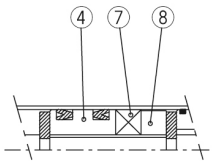

Built-in magnet ø8

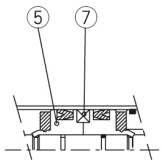

Built-in magnet ø10 to ø16

Component Parts

No.	Description	Material	Quantity	Remarks
①	Rod cover	Aluminum alloy	2	White anodized
②	Cylinder tube	Stainless steel	1	
③	Piston rod	Stainless steel	1	2 for ø8
④	Piston A	Brass	1	
⑤	Piston B	Brass	2	(Switch style piston)
⑥	Bushing	Sintered bronze	2	
⑦	Magnet		1	(Switch style only)
⑧	Spacer	Brass	1	

No.	Description	Material	Quantity	Remarks
⑨	Bumper	Urethane	2	
⑩	Piston gasket	NBR	1	2 for switch style
⑪	Tube gasket	NBR	2	
⑫	Rod seal	NBR	2	
⑬	Piston seal	NBR	2	
⑭	Rod end nut	Carbon steel	2	Nickel plated
⑮	Mounting nut	Carbon steel	1	Nickel plated

Specifications are subject to change without prior notice and any obligation on the part of the manufacturer.

SMC CORPORATION Zuazobidea 14, 01012, Vitoria-Gasteiz, Álava +34 945184100 +34 945184126 www.smc.eu support.marketingeurope@smc.com

Additional information

Catalogue	VDMA-C85_EU.pdf

Specifications are subject to change without prior notice and any obligation on the part of the manufacturer.

SMC CORPORATION Zuazobidea 14, 01012, Vitoria-Gasteiz, Álava +34 945184100 +34 945184126 www.smc.eu support.marketingeurope@smc.com