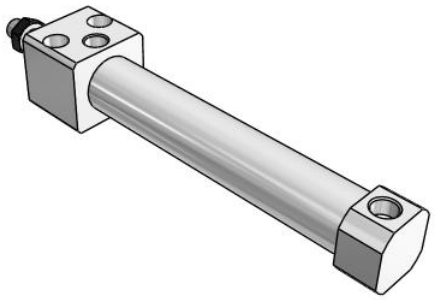

C(D)85R, ISO Cylinder, Double Acting, Single Rod, Direct Mount

CD85RAF20-80-B

Datasheet

General series information

- ISO cylinder, double acting, single rod
- Bore sizes (mm): 8, 10, 12, 16, 20, 25
- Type: direct mount
- Cushion: rubber bumper only
- Strokes (mm): up to 160 (depending on bore)
- Auto switches available (order separate)

Double-acting cylinder, non-rotating single piston rod

Standard specifications

Magnet	D (Built-in)
Type	A (Bottom)
Mounting	F (Boss Cut)
Bore Size	Ø20 mm
Stroke	80
Switch Mounting	B (Band)
Auto Switch	No Switch
Lead Wire or Prewired Connector	0.5m (Or None in the Case of No Switch)
Number	2 pcs. (Or None in the Case of No Switch)
Rod End Options	None
Temperature Resistance	None
Low Speed	None
Made of Stainless Steel	None
Long Stroke	None
Pressure medium	Compressed Air
Maximum temperature of pressure medium with magnet	60 °C
Minimum temperature of pressure medium with magnet	-10 °C

Specifications are subject to change without prior notice and any obligation on the part of the manufacturer.

SMC CORPORATION Zuazobidea 14, 01012, Vitoria-Gasteiz, Álava +34 945184100 +34 945184126 www.smc.eu support.marketingeurope@smc.com

Maximum operating pressure	1 MPa
Minimum operating pressure	0.05 MPa
Proof pressure	1.5 MPa
Maximum ambient temperature with magnet	60 °C
Minimum ambient temperature with magnet	-10 °C
Number of pneumatic connections	2 pcs.
Pneumatic input connection	G 1/8
Pneumatic output connection	G 1/8
Mode of operation of drive	Double acting
Theoretical cylinder force, advance stroke (at 0.5 MPa)	157.1 N
Theoretical cylinder force, return stroke (at 0.5 MPa)	132.0 N
Maximum piston speed	1500 mm/s
Type of cushioning	Rubber bumper
Piston rod end	External thread
Geometric form of the piston rod	Single rod
Male thread of rod end	M8
Weight	0.229 Kg

Specifications are subject to change without prior notice and any obligation on the part of the manufacturer.

SMC CORPORATION Zuazobidea 14, 01012, Vitoria-Gasteiz, Álava +34 945184100 +34 945184126 www.smc.eu support.marketingeurope@smc.com

Dimensions

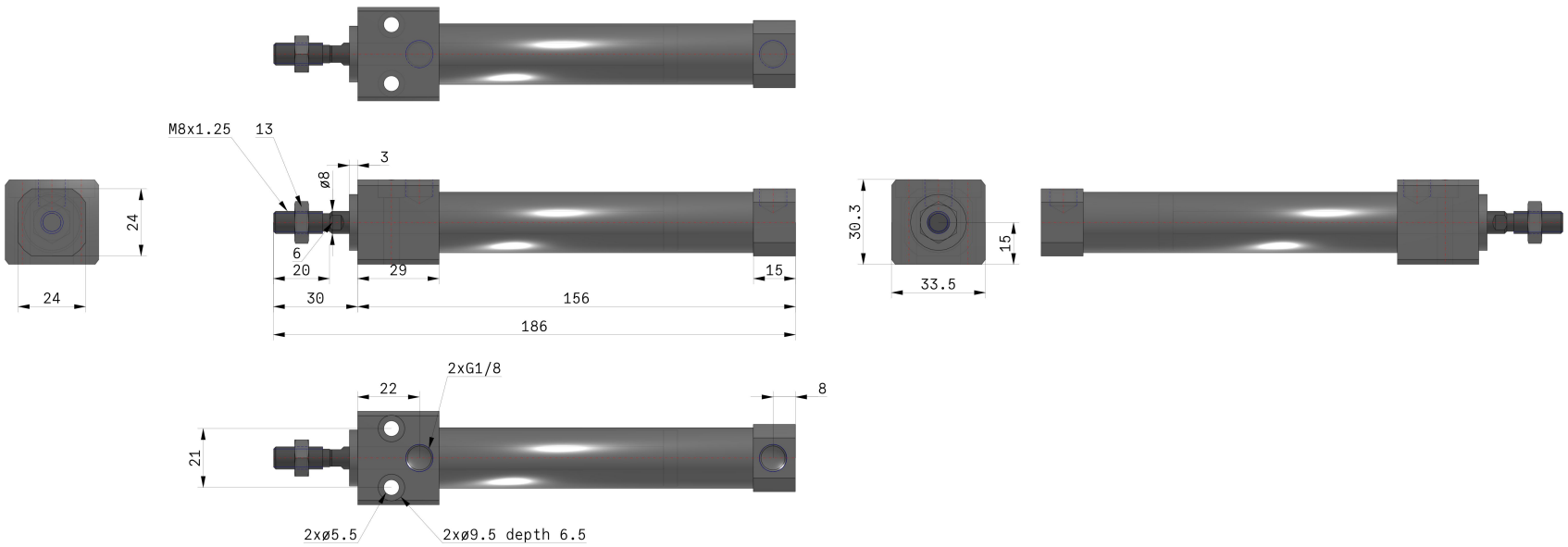

Specifications are subject to change without prior notice and any obligation on the part of the manufacturer.

SMC CORPORATION Zuazobidea 14, 01012, Vitoria-Gasteiz, Álava +34 945184100 +34 945184126 www.smc.eu support.marketingeurope@smc.com

Constructions

C□85R$^{A}_{B}$20, 25

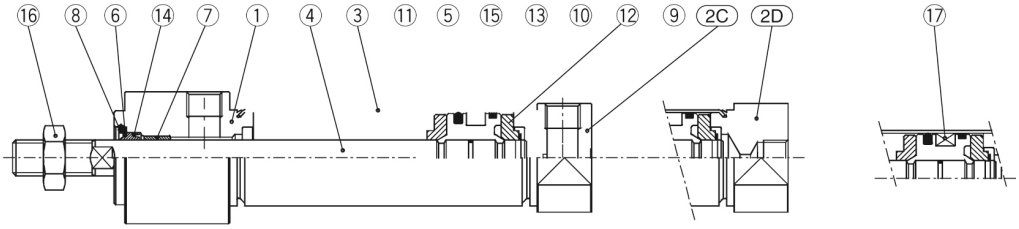

Standard | "F" Boss cut | "Y" Boss cut end port | Built-in magnet

Component Parts

No.	Description	Material	Quantity	Remarks
①	Rod cover	Aluminum alloy	1	White anodized
2C	Head cover F	Aluminum alloy	1	White anodized
2D	Head cover Y	Aluminum alloy	1	White anodized
③	Cylinder tube	Stainless steel	1	
④	Piston rod	Carbon steel	1	Hard chrome plated
⑤	Piston	Aluminum alloy	1	Chromated
⑥	Plain washer	Carbon steel	1	Nickel plated
⑦	Bushing	Sintered bronze	1	
⑧	Retaining ring	Carbon steel	1	Nickel plated

No.	Description	Material	Quantity	Remarks
⑨	Retaining ring	Carbon steel	1	
⑩	Wear ring	Phenolic resin	1	
⑪	Bumper A	Urethane	1	
⑫	Bumper B	Urethane	1	
⑬	Piston gasket	NBR	1	
⑭	Rod seal	NBR	1	
⑮	Piston seal	NBR	1	
⑯	Rod end nut	Carbon steel	1	Nickel plated
⑰	Magnet		1	(Switch style only)

Specifications are subject to change without prior notice and any obligation on the part of the manufacturer.

SMC CORPORATION Zuazobidea 14, 01012, Vitoria-Gasteiz, Álava +34 945184100 +34 945184126 www.smc.eu support.marketingeurope@smc.com

Additional information

Catalogue	VDMA-C85_EU.pdf

Specifications are subject to change without prior notice and any obligation on the part of the manufacturer.

SMC CORPORATION Zuazobidea 14, 01012, Vitoria-Gasteiz, Álava +34 945184100 +34 945184126 www.smc.eu support.marketingeurope@smc.com