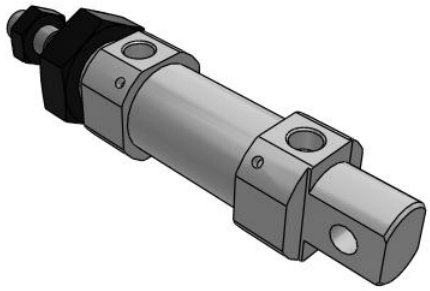

C(D)85, ISO Standard Cylinder, Double Acting, Single Rod

CD85N25-10C-B

Datasheet

General series information

- Double acting, single rod, crimped cylinder
- Conforms to ISO 6432 and CETOP RP52P
- Bore sizes (mm): 8, 10, 12, 16, 20, 25
- Standard strokes up to 300mm
- Auto switch capable

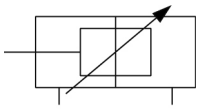

Double-acting cylinder with cushioning adjustable at both ends, single piston rod

Standard specifications

Low Speed	None
Stroke	10
Long Stroke	None
Magnet	D (Built-in)
Rod End Options	None
Auto Switch	No Switch
Cushion	C (Air Cushion)
Mounting	N (Basic Integrated Clevis)
Bore Size	Ø25 mm
Rod Boot	None
Lead Wire or Prewired Connector	0.5m (Or None in the Case of No Switch)
Number	2 pcs. (Or None in the Case of No Switch)
Stainless Steel	None
Temperature Resistance	None
Auto Switch Mounting Type	B (Band)
Pressure medium	Compressed Air
Maximum temperature of pressure medium	80 °C
Maximum temperature of pressure medium with magnet	60 °C

Specifications are subject to change without prior notice and any obligation on the part of the manufacturer.

SMC United Kingdom +34 945184126 sales@smc.uk

Minimum temperature of pressure medium	-20 °C [without condensation]
Minimum temperature of pressure medium with magnet	-10 °C [without condensation]
Maximum operating pressure	1 MPa
Minimum operating pressure	0.05 MPa
Proof pressure	1.5 MPa
Maximum ambient temperature	80 °C
Maximum ambient temperature with magnet	60 °C
Minimum ambient temperature	-20 °C
Minimum ambient temperature with magnet	-10 °C
Number of pneumatic connections	2 pcs.
Pneumatic input connection	G 1/8
Pneumatic output connection	G 1/8
Mode of operation of drive	Double acting
Theoretical cylinder force, advance stroke (at 0.5 MPa)	245.5 N
Theoretical cylinder force, return stroke (at 0.5 MPa)	206.2 N
Maximum piston speed	1,500 mm/s
Type of cushioning	Air cushion
Piston rod end	External thread
Geometric form of the piston rod	Single rod
Male thread of rod end	M10 x 1.25
Usable tubing material	Soft nylon;Nylon;Polyurethane
Minimum piston speed	50 mm/s
Weight	0.310 Kg

Specifications are subject to change without prior notice and any obligation on the part of the manufacturer.

SMC United Kingdom +34 945184126 sales@smc.uk

Dimensions

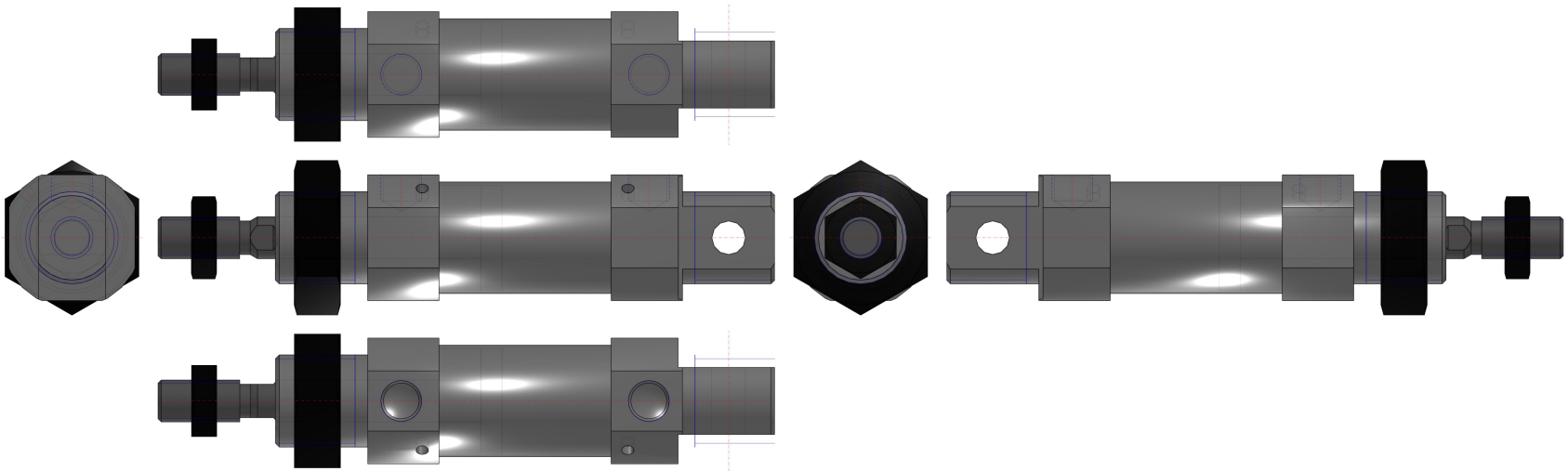

Specifications are subject to change without prior notice and any obligation on the part of the manufacturer.

SMC United Kingdom +34 945184126 sales@smc.uk

Constructions

C□85□20, 25 Air cushion

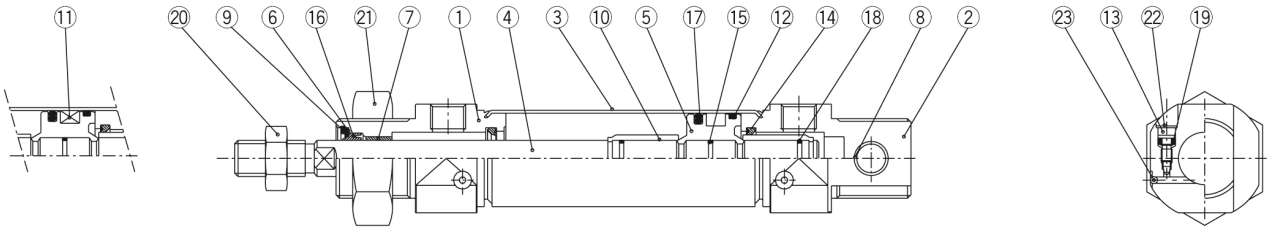

Built-in magnet Standard "N" integrated clevis

Component Parts

No.	Description	Material	Quantity	Remarks
①	Rod cover	Aluminum alloy	1	White anodized
②	Head cover N	Aluminum alloy	1	White anodized
③	Cylinder tube	Stainless steel	1	
④	Piston rod	Carbon steel	1	Hard chrome plated
⑤	Piston	Aluminum alloy	1	Chromated
⑥	Plain washer	Carbon steel	1	Nickel plated
⑦	Bushing	Sintered bronze	1	
⑧	Bushing	Sintered bronze	1	
⑨	Retaining ring	Carbon steel	1	Nickel plated
⑩	Cushion ring	Copper alloy	2	Hard chrome plated
⑪	Magnet		1	
⑫	Wear ring	Phenolic resin	1	

No.	Description	Material	Quantity	Remarks
⑬	Cushion valve	Carbon steel	2	Nickel plated
⑭	Cushion seal	Urethane	2	
⑮	Piston gasket	NBR	1	
⑯	Rod seal	NBR	1	
⑰	Piston seal	NBR	1	
⑱	Cushion ring gasket	NBR	2	
⑲	Cushion valve packing	NBR	2	
⑳	Rod end nut	Carbon steel	1	Nickel plated
㉑	Mounting nut	Carbon steel	1	Nickel plated
㉒	Self locking ring	Stainless steel	2	
㉓	Steel ball	Stainless steel	2	

Specifications are subject to change without prior notice and any obligation on the part of the manufacturer.

SMC United Kingdom +34 945184126 sales@smc.uk

Additional information

Catalogue	C85_C75-A_EU.pdf

Specifications are subject to change without prior notice and any obligation on the part of the manufacturer.

SMC United Kingdom +34 945184126 sales@smc.uk