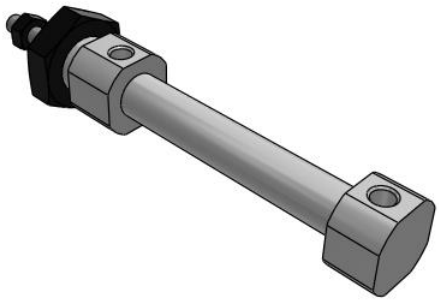

C(D)85K, ISO Cylinder, Double Acting, Single Rod, Non-Rotating

CD85KF8-25-B

Datasheet

General series information

- ISO cylinder, double acting, single rod
- Bore sizes (mm): 8, 10, 12, 16, 20, 25
- Type: non-rotating
- Cushion: rubber bumper only
- Strokes (mm): up to 300 (depending on bore)
- Auto switches available (order separate)

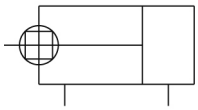

Double-acting cylinder, non-rotating single piston rod

Standard specifications

Magnet	D (Built-in)
Mounting	F (Boss Cut)
Bore Size	Ø8 mm
Stroke	25
Switch Mounting	B (Band)
Auto Switch	No Switch
Lead Wire or Prewired Connector	0.5m (Or None in the Case of No Switch)
Number	2 pcs. (Or None in the Case of No Switch)
Rod End Options	None
Made of Stainless Steel	None
Long Stroke	None
Pressure medium	Compressed air
Maximum temperature of pressure medium with magnet	60 °C
Minimum temperature of pressure medium with magnet	-10 °C
Maximum operating pressure	1 MPa
Minimum operating pressure	0.1 MPa
Proof pressure	1.5 MPa

Specifications are subject to change without prior notice and any obligation on the part of the manufacturer.

SMC CORPORATION Zuazobidea 14, 01012, Vitoria-Gasteiz, Álava +34 945184100 +34 945184126 www.smc.eu support.marketingeurope@smc.com

Maximum ambient temperature with magnet	60 °C
Minimum ambient temperature with magnet	-10 °C
Number of pneumatic connections	2 pcs.
Pneumatic input connection	M5
Pneumatic output connection	M5
Mode of operation of drive	Double acting
Theoretical cylinder force, advance stroke (at 0.5 MPa)	25.2 N
Theoretical cylinder force, return stroke (at 0.5 MPa)	18.9 N
Maximum piston speed	1500 mm/s
Type of cushioning	Rubber bumper
Piston rod end	External thread
Geometric form of the piston rod	Single rod
Male thread of rod end	M4
Tolerance of torsion	±1° 30'
Weight	0.053 Kg

Specifications are subject to change without prior notice and any obligation on the part of the manufacturer.

SMC CORPORATION Zuazobidea 14, 01012, Vitoria-Gasteiz, Álava +34 945184100 +34 945184126 www.smc.eu support.marketingeurope@smc.com

Dimensions

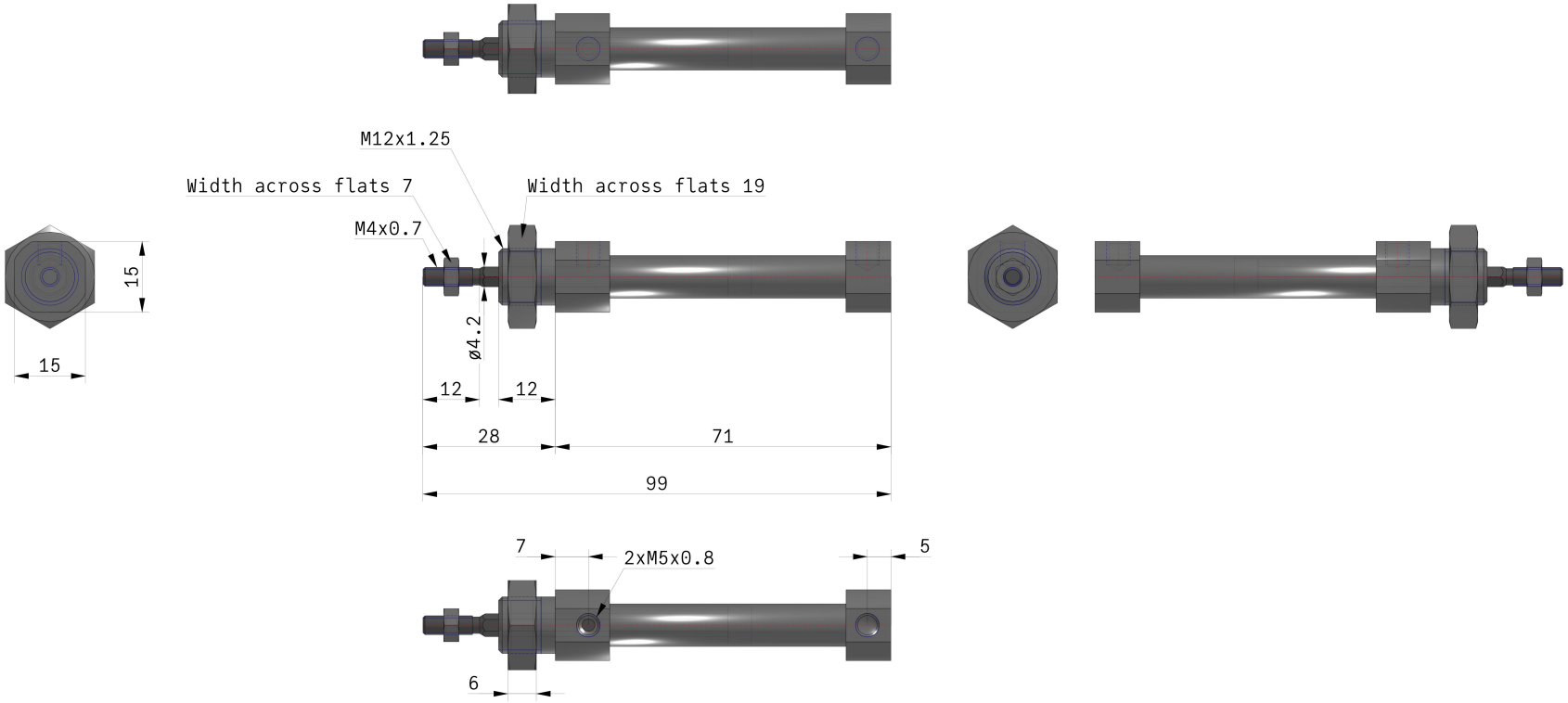

Specifications are subject to change without prior notice and any obligation on the part of the manufacturer.

SMC CORPORATION Zuazobidea 14, 01012, Vitoria-Gasteiz, Álava +34 945184100 +34 945184126 www.smc.eu support.marketingeurope@smc.com

Constructions

Double acting: Single rod
C□85□8 to16 Rubber bumper (Disassembly is not possible)

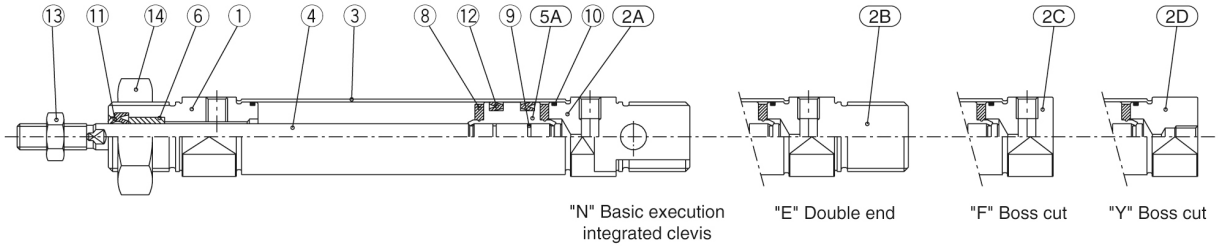

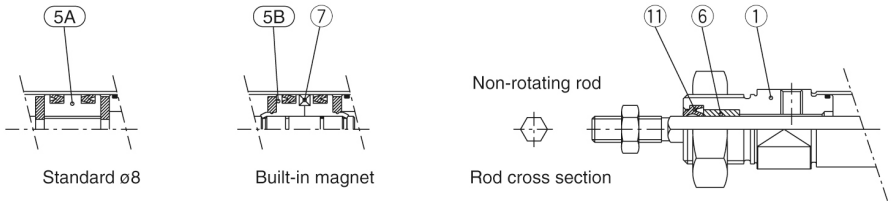

Component Parts

No.	Description	Material	Quantity	Remarks
①	Rod cover	Aluminum alloy	1	White anodized
2A	Head cover N	Aluminum alloy	1	White anodized
2B	Head cover E	Aluminum alloy	1	White anodized
2C	Head cover F	Aluminum alloy	1	White anodized
2D	Head cover Y	Aluminum alloy	1	White anodized
③	Cylinder tube	Stainless steel	1	
④	Piston rod	Stainless steel	1	
5A	Piston A	Brass	1	
5B	Piston B	Brass	2	(Switch style piston)

No.	Description	Material	Quantity	Remarks
⑥	Bushing	Sintered bronze	1	
⑦	Magnet		1	(Switch style only)
⑧	Bumper	Urethane	2	
⑨	Piston gasket	NBR	1	(2 for switch style)
⑩	Tube gasket	NBR	2	
⑪	Rod seal	NBR	1	
⑫	Piston seal	NBR	2	
⑬	Rod end nut	Carbon steel	1	Nickel plated
⑭	Mounting nut	Carbon steel	1	Nickel plated

Specifications are subject to change without prior notice and any obligation on the part of the manufacturer.

SMC CORPORATION Zuazobidea 14, 01012, Vitoria-Gasteiz, Álava +34 945184100 +34 945184126 www.smc.eu support.marketingeurope@smc.com

Additional information

Catalogue	VDMA-C85_EU.pdf

Specifications are subject to change without prior notice and any obligation on the part of the manufacturer.

SMC CORPORATION Zuazobidea 14, 01012, Vitoria-Gasteiz, Álava +34 945184100 +34 945184126 www.smc.eu support.marketingeurope@smc.com