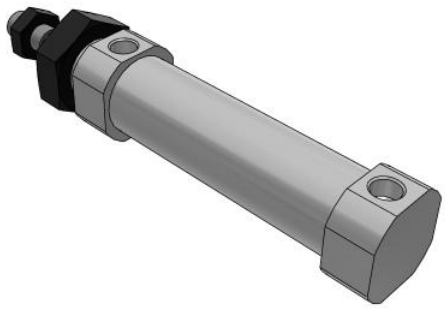

# C(D)85, ISO Standard Cylinder, Double Acting, Single Rod

## CD85F25-50-B

Datasheet

## General series information

- Double acting, single rod, crimped cylinder
- Conforms to ISO 6432 and CETOP RP52P
- Bore sizes (mm): 8, 10, 12, 16, 20, 25
- Standard strokes up to 300mm
- Auto switch capable

*Double-acting, single-rod cylinder*

## Standard specifications

| | |
|---|---|
| Magnet | D (Built-in) |
| Mounting | F (Boss Cut) |
| Bore Size | Ø25 mm |
| Stroke | 50 |
| Cushion | Rubber Cushion |
| Rod Boot | None |
| Auto Switch Mounting Type | B (Band) |
| Auto Switch | No Switch |
| Lead Wire or Prewired Connector | 0.5m (Or None in the Case of No Switch) |
| Number | 2 pcs. (Or None in the Case of No Switch) |
| Rod End Options | None |
| Temperature Resistance | None |
| Low Speed | None |
| Stainless Steel | None |
| Long Stroke | None |
| Pressure medium | Compressed Air |
| Maximum temperature of pressure medium | 80 °C |
| Maximum temperature of pressure medium with magnet | 60 °C |

*Specifications are subject to change without prior notice and any obligation on the part of the manufacturer.*



**SMC CORPORATION** Zuazobidea 14, 01012, Vitoria-Gasteiz, Álava +34 945184100 +34 945184126 www.smc.eu support.marketingeurope@smc.com

| | |
|---|---|
| Minimum temperature of pressure medium | -20 °C [without condensation] |
| Minimum temperature of pressure medium with magnet | -10 °C [without condensation] |
| Maximum operating pressure | 1 MPa |
| Minimum operating pressure | 0.05 MPa |
| Proof pressure | 1.5 MPa |
| Maximum ambient temperature | 80 °C |
| Maximum ambient temperature with magnet | 60 °C |
| Minimum ambient temperature | -20 °C |
| Minimum ambient temperature with magnet | -10 °C |
| Number of pneumatic connections | 2 pcs. |
| Pneumatic input connection | G 1/8 |
| Pneumatic output connection | G 1/8 |
| Mode of operation of drive | Double acting |
| Theoretical cylinder force, advance stroke (at 0.5 MPa) | 245.5 N |
| Theoretical cylinder force, return stroke (at 0.5 MPa) | 206.2 N |
| Maximum piston speed | 1,500 mm/s |
| Type of cushioning | Rubber bumper |
| Piston rod end | External thread |
| Geometric form of the piston rod | Single rod |
| Male thread of rod end | M10 x 1.25 |
| Usable tubing material | Soft nylon;Nylon;Polyurethane |
| Minimum piston speed | 50 mm/s |
| Weight | 0.288 Kg |

*Specifications are subject to change without prior notice and any obligation on the part of the manufacturer.*



**SMC CORPORATION** Zuazobidea 14, 01012, Vitoria-Gasteiz, Álava +34 945184100 +34 945184126 www.smc.eu support.marketingeurope@smc.com

# Dimensions

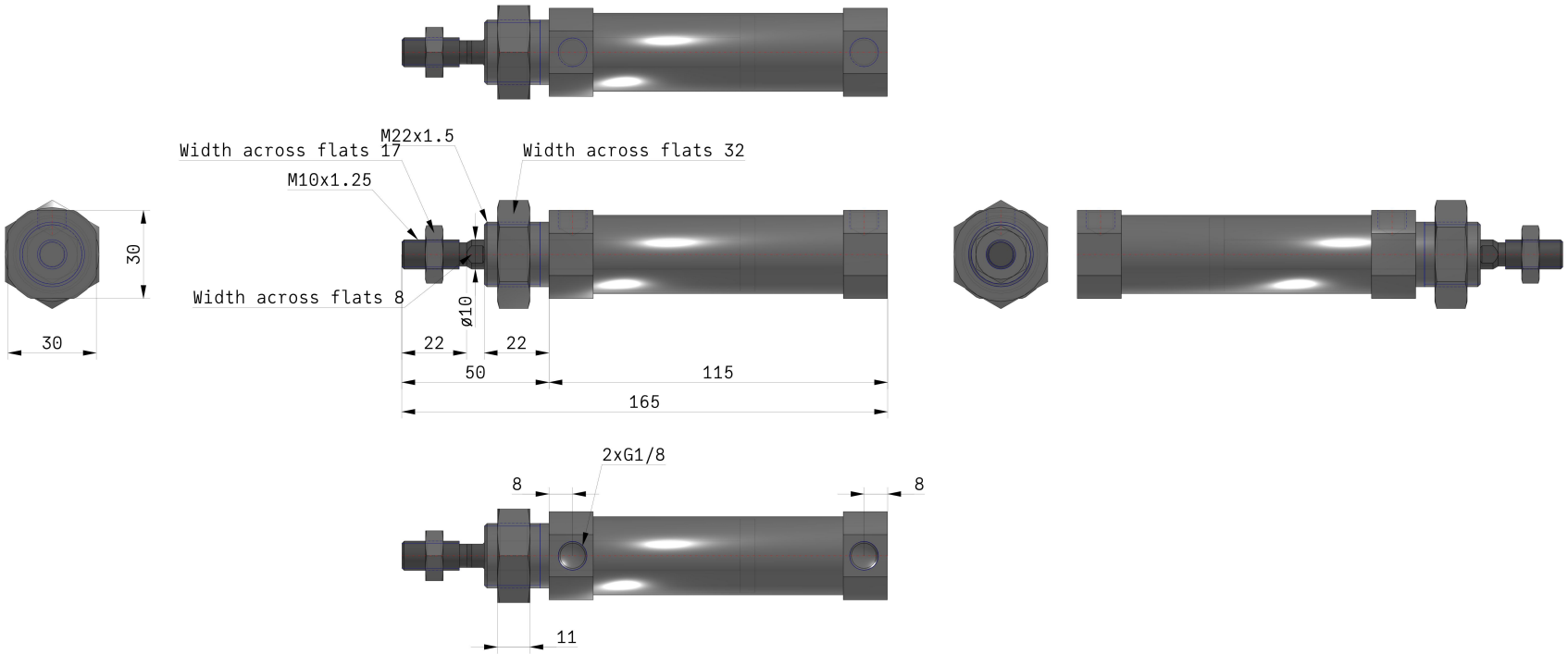


Specifications are subject to change without prior notice and any obligation on the part of the manufacturer.



SMC CORPORATION Zuazobidea 14, 01012, Vitoria-Gasteiz, Álava +34 945184100 +34 945184126 www.smc.eu support.marketingeurope@smc.com

# Constructions

### C□85□20, 25 Rubber bumper

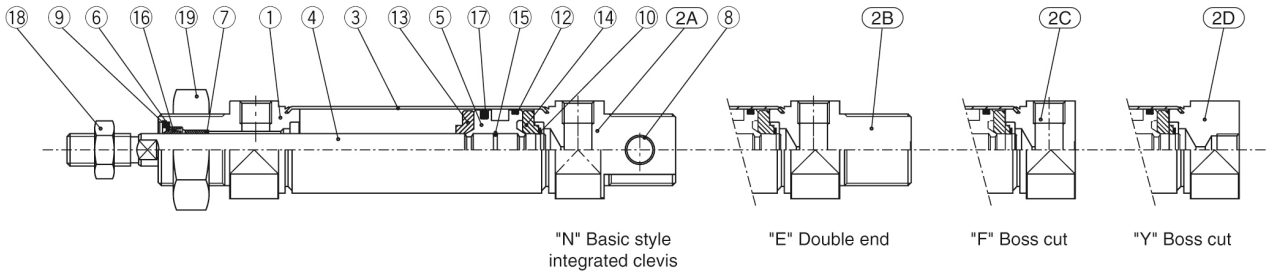


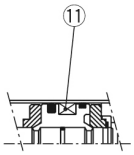


Built-in magnet

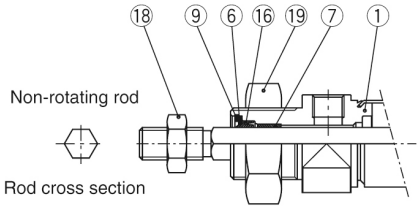


### Component Parts

| No. | Description | Material | Quantity | Remarks |
|---|---|---|---|---|
| ① | Rod cover | Aluminum alloy | 1 | White anodized |
| 2A | Head cover N | Aluminum alloy | 1 | White anodized |
| 2B | Head cover E | Aluminum alloy | 1 | White anodized |
| 2C | Head cover F | Aluminum alloy | 1 | White anodized |
| 2D | Head cover Y | Aluminum alloy | 1 | White anodized |
| ③ | Cylinder tube | Stainless steel | 1 | |
| ④ | Piston rod | Carbon steel | 1 | Hard chrome plated |
| ⑤ | Piston | Aluminum alloy | 1 | Chromated |
| ⑥ | Plain washer | Carbon steel | 1 | Nickel plated |
| ⑦ | Bushing | Sintered bronze | 1 | |
| ⑧ | Bushing | Sintered bronze | 2 | |

| No. | Description | Material | Quantity | Remarks |
|---|---|---|---|---|
| ⑨ | Retaining ring | Carbon steel | 1 | Nickel plated |
| ⑩ | Retaining ring | Carbon steel | 2 | |
| ⑪ | Magnet | | 1 | (Switch style only) |
| ⑫ | Wear ring | Phenolic resin | 1 | |
| ⑬ | Bumper A | Urethane | 1 | |
| ⑭ | Bumper B | Urethane | 1 | |
| ⑮ | Piston gasket | NBR | 1 | |
| ⑯ | Rod seal | NBR | 1 | |
| ⑰ | Piston seal | NBR | 1 | |
| ⑱ | Rod end nut | Carbon steel | 1 | Nickel plated |
| ⑲ | Mounting nut | Carbon steel | 1 | Nickel plated |

* Stainless steel (Non-rotating rod)

Specifications are subject to change without prior notice and any obligation on the part of the manufacturer.



SMC CORPORATION Zuazobidea 14, 01012, Vitoria-Gasteiz, Álava +34 945184100 +34 945184126 www.smc.eu support.marketingeurope@smc.com

## Additional information

Catalogue C85_C75-A_EU.pdf

Specifications are subject to change without prior notice and any obligation on the part of the manufacturer.



SMC CORPORATION Zuazobidea 14, 01012, Vitoria-Gasteiz, Álava +34 945184100 +34 945184126 www.smc.eu support.marketingeurope@smc.com