C(D)85, ISO Standard Cylinder, Double Acting, Single Rod

CD85F12-400-A-X2018

Datasheet

General series information

- Double acting, single rod, crimped cylinder
- Conforms to ISO 6432 and CETOP RP52P
- Bore sizes (mm): 8, 10, 12, 16, 20, 25
- Standard strokes up to 300mm
- Auto switch capable

Double-acting cylinder with cushioning adjustable at both ends, single piston rod

Standard specifications

Magnet	D (Built-in)
Mounting	F (Boss Cut)
Bore Size	Ø12 mm
Stroke	400
Cushion	Rubber Cushion
Rod Boot	None
Auto Switch Mounting	A (Rail)
Auto Switch	No Switch
Lead Wire or Pre-wired Connector	0.5 m (Or None in the Case of No Switch)
Number	2 pcs. (Or None in Case of No Switch)
Rod End Options	None
Temperature Resistance	None
Low Speed	None
Stainless Steel	None
Long Stroke	X2018 (Long Stroke)
Pressure medium	Compressed Air
Maximum temperature of pressure medium	80 °C
Maximum temperature of pressure medium with magnet	60 °C

Specifications are subject to change without prior notice and any obligation on the part of the manufacturer.

SMC CORPORATION Zuazobidea 14, 01012, Vitoria-Gasteiz, Álava +34 945184100 +34 945184126 www.smc.eu support.marketingeurope@smc.com

Minimum temperature of pressure medium	-20 °C [without condensation]
Minimum temperature of pressure medium with magnet	-10 °C [without condensation]
Maximum operating pressure	1 MPa
Minimum operating pressure	0.08 MPa
Proof pressure	1.5 MPa
Maximum ambient temperature	80 °C
Maximum ambient temperature with magnet	60 °C
Minimum ambient temperature	-20 °C
Minimum ambient temperature with magnet	-10 °C
Number of pneumatic connections	2 pcs.
Pneumatic input connection	M5
Pneumatic output connection	M5
Mode of operation of drive	Double acting
Theoretical cylinder force, advance stroke (at 0.5 MPa)	56.6 N
Theoretical cylinder force, return stroke (at 0.5 MPa)	42.4 N
Maximum piston speed	1,500 mm/s
Type of cushioning	Rubber bumper
Piston rod end	External thread
Geometric form of the piston rod	Single rod
Male thread of rod end	M6
Usable tubing material	Soft nylon;Nylon;Polyurethane
Minimum piston speed	50 mm/s

Specifications are subject to change without prior notice and any obligation on the part of the manufacturer.

SMC CORPORATION Zuazobidea 14, 01012, Vitoria-Gasteiz, Álava +34 945184100 +34 945184126 www.smc.eu support.marketingeurope@smc.com

Dimensions

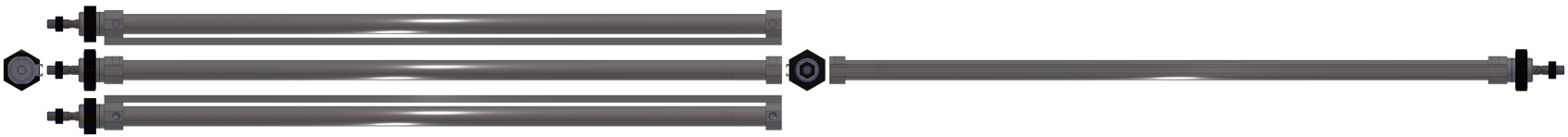

Specifications are subject to change without prior notice and any obligation on the part of the manufacturer.

SMC CORPORATION Zuazobidea 14, 01012, Vitoria-Gasteiz, Álava +34 945184100 +34 945184126 www.smc.eu support.marketingeurope@smc.com

Constructions

C□85□20, 25 Rubber bumper

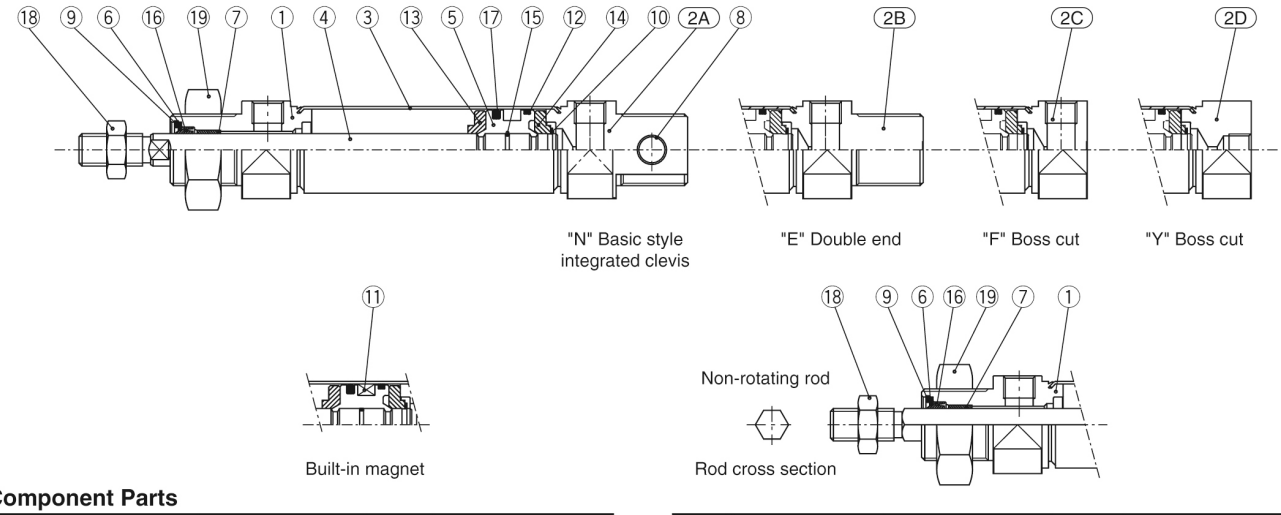

Component Parts

No.	Description	Material	Quantity	Remarks
①	Rod cover	Aluminum alloy	1	White anodized
2A	Head cover N	Aluminum alloy	1	White anodized
2B	Head cover E	Aluminum alloy	1	White anodized
2C	Head cover F	Aluminum alloy	1	White anodized
2D	Head cover Y	Aluminum alloy	1	White anodized
③	Cylinder tube	Stainless steel	1	
④	Piston rod	Carbon steel	1	Hard chrome plated
⑤	Piston	Aluminum alloy	1	Chromated
⑥	Plain washer	Carbon steel	1	Nickel plated
⑦	Bushing	Sintered bronze	1	
⑧	Bushing	Sintered bronze	2	

No.	Description	Material	Quantity	Remarks
⑨	Retaining ring	Carbon steel	1	Nickel plated
⑩	Retaining ring	Carbon steel	2	
⑪	Magnet		1	(Switch style only)
⑫	Wear ring	Phenolic resin	1	
⑬	Bumper A	Urethane	1	
⑭	Bumper B	Urethane	1	
⑮	Piston gasket	NBR	1	
⑯	Rod seal	NBR	1	
⑰	Piston seal	NBR	1	
⑱	Rod end nut	Carbon steel	1	Nickel plated
⑲	Mounting nut	Carbon steel	1	Nickel plated

* Stainless steel (Non-rotating rod)

Specifications are subject to change without prior notice and any obligation on the part of the manufacturer.

SMC CORPORATION Zuazobidea 14, 01012, Vitoria-Gasteiz, Álava +34 945184100 +34 945184126 www.smc.eu support.marketingeurope@smc.com

Additional information

Catalogue	VDMA-C85_EU.pdf

Specifications are subject to change without prior notice and any obligation on the part of the manufacturer.

SMC CORPORATION Zuazobidea 14, 01012, Vitoria-Gasteiz, Álava +34 945184100 +34 945184126 www.smc.eu support.marketingeurope@smc.com