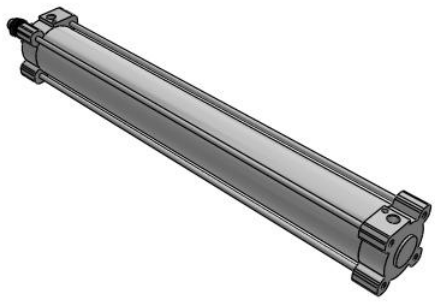

C96Y(D), ISO 15552 Cylinder, Smooth Cylinder, Double Acting, Single Rod

C96YDB80-600C

Datasheet

General series information

- Double acting, Smooth Cylinder, single rod
- Bore sizes (mm): 32, 40, 50, 63, 80, 100
- Standard stroke up to 500mm, maximum stroke 1000mm
- Auto switch capable

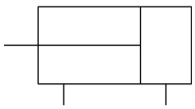

Double-acting, single-rod cylinder

Standard specifications

Magnet	D (Built-in Magnet)
Mounting	B (Basic, w/o Bracket)
Bore Size	Ø80 mm
Stroke	600
Auto Switch	No Switch
Lead Wire or Pre-wired Connector	0.5 m (Or None in the Case of No Switch)
Number	2 pcs. (Or None in the Case of No Switch)
Rod End Options	None
Pressure medium	Compressed air
Maximum temperature of pressure medium with magnet	60 ºC
Minimum temperature of pressure medium with magnet	-10 ºC (no freezing)
Maximum operating pressure	0.7 MPa
Minimum operating pressure	0.01 MPa
Proof pressure	1.05 MPa
Maximum ambient temperature with magnet	60 ºC
Minimum ambient temperature with magnet	-10 ºC (no freezing)
Number of pneumatic connections	2 pcs.
Pneumatic input connection	G 3/8
Pneumatic exhaust connection	G 3/8

Specifications are subject to change without prior notice and any obligation on the part of the manufacturer.

SMC CORPORATION Zuazobidea 14, 01012, Vitoria-Gasteiz, Álava +34 945184100 +34 945184126 www.smc.eu support.marketingeurope@smc.com

Mode of operation of drive	Double acting
Maximum piston speed	500 mm/s
Type of cushioning	Bumper cushion
Piston rod end	Male-thread
Geometric form of the piston rod	Single rod
Male thread of rod end	M20 x 1.5
Minimum piston speed	50 mm/s
Weight	7.894 Kg

Specifications are subject to change without prior notice and any obligation on the part of the manufacturer.

SMC CORPORATION Zuazobidea 14, 01012, Vitoria-Gasteiz, Álava +34 945184100 +34 945184126 www.smc.eu support.marketingeurope@smc.com

Dimensions

基本形：C96S(D)B チューブ内径 − ストローク C(J)

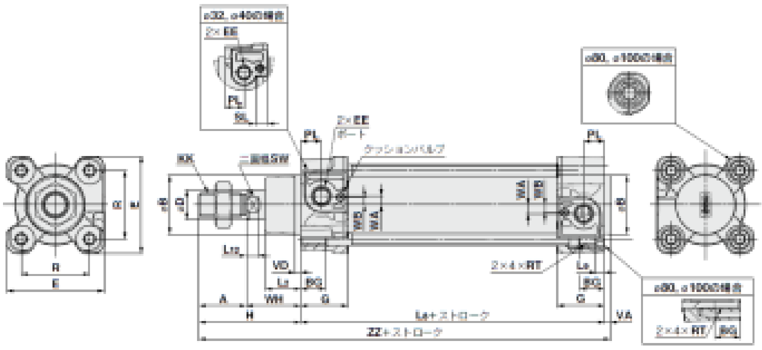

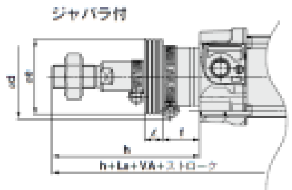

チューブ内径 (mm)	ストローク範囲(mm) ジャバラ無し	ジャバラ付	A	øB e11	BG	øD	E	EE	G	H	KK	L2	La	Lb	L12	PL	R	RT	SL	SW	VA	VD	WA	WB	WH	ZZ
32	~1000	~1000	22	30	16	12	47	G 1/8	28.9	46	M10×1.25	15	94	4	6	13	32.5	M6×1	6	10	4	4	4	7	26	146
40	~1900	~1000	24	35	16	16	54	G 1/4	32.6	54	M12×1.25	17	105	4	6.5	14	38	M6×1	6	13	4	4	5	8.9	30	163
50	~1900	~1000	32	40	16	20	66	G 1/4	32	68	M16×1.5	24	106	5	8	14	46.5	M8×1.25	—	17	4	4	6	5.1	37	179
63	~1900	~1000	32	45	16	20	77	G 3/8	38.6	69	M16×1.5	24	121	5	8	16	56.5	M8×1.25	—	17	4	4	9	6.3	37	194
80	~1900	~1000	40	45	17	25	99	G 3/8	38.4	86	M20×1.5	30	128	—	10	16	72	M10×1.5	—	22	4	4	11.5	6	46	218
100	~1900*	~1000*	40	55	17	25	118	G 1/2	42.9	91	M20×1.5	32	138	—	10	18	89	M10×1.5	—	22	4	4	17	10	51	233

※取付支持形式がトラニオン形の場合、最小ストロークはチューブ内径32～80の場合0mm、100の場合5mm。

チューブ内径 (mm)	øe	ød	f	ℓ 1～50	ℓ 51～100	ℓ 101～150	ℓ 151～200	ℓ 201～300	ℓ 301～400	ℓ 401～500	ℓ 501～600	ℓ 601～700	ℓ 701～800	ℓ 801～900	ℓ 901～1000	h 1～50	h 51～100	h 101～150	h 151～200	h 201～300	h 301～400	h 401～500	h 501～600	h 601～700	h 701～800	h 801～900	h 901～1000
32	36	54	23	12.5	25	37.5	50	75	100	125	150	175	200	225	250	75	88	100	113	138	163	188	213	238	263	288	313
40	36	54	23	12.5	25	37.5	50	75	100	125	150	175	200	225	250	75	88	100	113	138	163	188	213	238	263	288	313
50	51	64	25	12.5	25	37.5	50	75	100	125	150	175	200	225	250	87	100	112	125	150	175	200	225	250	275	300	325
63	51	64	25	12.5	25	37.5	50	75	100	125	150	175	200	225	250	87	100	112	125	150	175	200	225	250	275	300	325
80	56	68	30	12.5	25	37.5	50	75	100	125	150	175	200	225	250	103	116	128	141	166	191	216	241	266	291	316	341
100	56	76	32	12.5	25	37.5	50	75	100	125	150	175	200	225	250	103	116	128	141	166	191	216	241	266	291	316	341

Specifications are subject to change without prior notice and any obligation on the part of the manufacturer.

SMC CORPORATION Zuazobidea 14, 01012, Vitoria-Gasteiz, Álava +34 945184100 +34 945184126 www.smc.eu support.marketingeurope@smc.com

Additional information

Catalogue C96-Bb_EU.pdf

Specifications are subject to change without prior notice and any obligation on the part of the manufacturer.

SMC CORPORATION Zuazobidea 14, 01012, Vitoria-Gasteiz, Álava +34 945184100 +34 945184126 www.smc.eu support.marketingeurope@smc.com