C(D)85W, ISO Cylinder, Double Acting, Double Rod

C85WE25-160C

Datasheet

General series information

- ISO cylinder, double acting, double rod
- Fluid: air
- Bore sizes (mm): 8, 10, 12, 16, 20, 25
- Strokes (mm): up to 300 (depending on bore)
- Auto switches available (order separate)

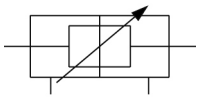

Double-acting cylinder with cushioning adjustable at both ends, double piston rod

Standard specifications

Magnet	None
Bore Size	Ø25 mm
Stroke	160
Cushion	C (Air Cushion)
Rod Boot	Standard
Switch Mounting	No Switch
Auto Switch	No Switch
Lead Wire or Prewired Connector	0.5m (Or None in the Case of No Switch)
Number	2 pcs. (Or None in the Case of No Switch)
Rod End Options	None
Temperature Resistance	None
Made of Stainless Steel	None
Long Stroke	None
Pressure medium	Compressed Air
Maximum temperature of pressure medium	80°C
Minimum temperature of pressure medium	-20°C
Maximum operating pressure	1 MPa
Minimum operating pressure	0.05 MPa

Specifications are subject to change without prior notice and any obligation on the part of the manufacturer.

SMC CORPORATION Zuazobidea 14, 01012, Vitoria-Gasteiz, Álava +34 945184100 +34 945184126 www.smc.eu support.marketingeurope@smc.com

Proof pressure	1.5 MPa
Maximum ambient temperature	80°C
Minimum ambient temperature	-20°C
Number of pneumatic connections	2 pcs.
Pneumatic input connection	G 1/8
Mode of operation of drive	Double acting
Maximum piston speed	1500 mm/s
Type of cushioning	Air cushion
Type of Stroke end	Double rod
Piston rod end	External thread
Male thread of rod end	M10 x 1.25
Weight	0.587 Kg

Specifications are subject to change without prior notice and any obligation on the part of the manufacturer.

SMC CORPORATION Zuazobidea 14, 01012, Vitoria-Gasteiz, Álava +34 945184100 +34 945184126 www.smc.eu support.marketingeurope@smc.com

Dimensions

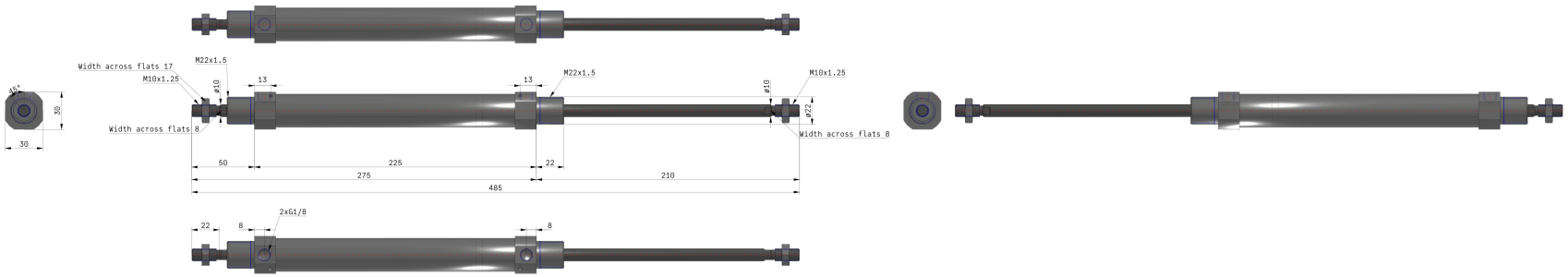

Specifications are subject to change without prior notice and any obligation on the part of the manufacturer.

SMC CORPORATION Zuazobidea 14, 01012, Vitoria-Gasteiz, Álava +34 945184100 +34 945184126 www.smc.eu support.marketingeurope@smc.com

Constructions

C□85WE 20, 25 Air cushion

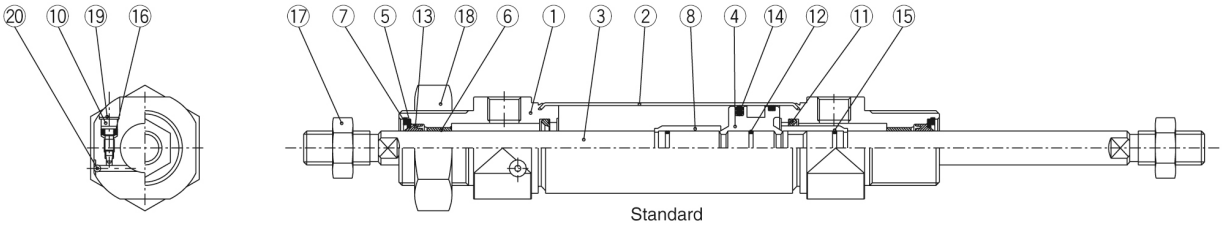

Standard

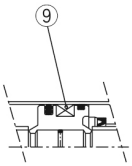

Built-in magnet

Component Parts

No.	Description	Material	Quantity	Remarks
①	Rod cover	Aluminum alloy	2	White anodized
②	Cylinder tube	Stainless steel	1	
③	Piston rod	Carbon steel	1	Hard chrome plated
④	Piston	Aluminum alloy	1	Chromated
⑤	Plain washer	Carbon steel	2	Nickel plated
⑥	Bushing	Sintered bronze	2	
⑦	Retaining ring	Carbon steel	2	Nickel plated
⑧	Cushion ring	Copper alloy	2	Hard chrome plated
⑨	Magnet			
⑩	Cushion valve	Carbon steel	2	Nickel plated

No.	Description	Material	Quantity	Remarks
⑪	Cushion seal	Urethane	2	
⑫	Piston gasket	NBR	1	
⑬	Rod seal	NBR	2	
⑭	Piston seal	NBR	1	
⑮	Cushion ring gasket	NBR	2	
⑯	Cushion valve packing	NBR	2	
⑰	Rod end nut	Carbon steel	2	Nickel plated
⑱	Mounting nut	Carbon steel	1	Nickel plated
⑲	Self locking ring	Stainless steel	2	
⑳	Steel ball	Stainless steel	2	

Specifications are subject to change without prior notice and any obligation on the part of the manufacturer.

SMC CORPORATION Zuazobidea 14, 01012, Vitoria-Gasteiz, Álava +34 945184100 +34 945184126 www.smc.eu support.marketingeurope@smc.com

Additional information

Catalogue VDMA-C85_EU.pdf

Specifications are subject to change without prior notice and any obligation on the part of the manufacturer.

SMC CORPORATION Zuazobidea 14, 01012, Vitoria-Gasteiz, Álava +34 945184100 +34 945184126 www.smc.eu support.marketingeurope@smc.com