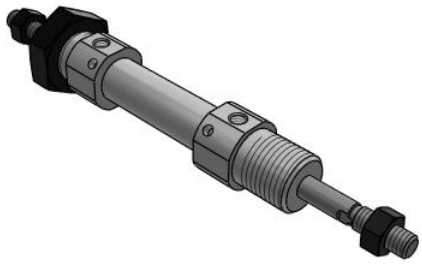

# C(D)85W, ISO Cylinder, Double Acting, Double Rod

C85WE12-10C

Datasheet

## General series information

- ISO cylinder, double acting, double rod
- Fluid: air
- Bore sizes (mm): 8, 10, 12, 16, 20, 25
- Strokes (mm): up to 300 (depending on bore)
- Auto switches available (order separate)

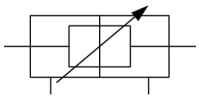

*Double-acting cylinder with cushioning adjustable at both ends, double piston rod*

## Standard specifications

| | |
|---|---|
| Magnet | None |
| Bore Size | Ø12 mm |
| Stroke | 10 |
| Cushion | C (Air Cushion) |
| Rod Boot | Standard |
| Switch Mounting | No Switch |
| Auto Switch | No Switch |
| Lead Wire or Pre-wired Connector | 0.5 m (Or None in the Case of No Switch) |
| Number | 2 pcs. (Or None in Case of No Switch) |
| Rod End Options | None |
| Temperature Resistance | None |
| Made of Stainless Steel | None |
| Long Stroke | None |
| Pressure medium | Compressed Air |
| Maximum temperature of pressure medium | 80°C |
| Minimum temperature of pressure medium | -20°C |
| Maximum operating pressure | 1 MPa |
| Minimum operating pressure | 0.08 MPa |

*Specifications are subject to change without prior notice and any obligation on the part of the manufacturer.*



**SMC CORPORATION** Zuazobidea 14, 01012, Vitoria-Gasteiz, Álava +34 945184100 +34 945184126 www.smc.eu support.marketingeurope@smc.com

| | |
|---|---|
| Proof pressure | 1.5 MPa |
| Maximum ambient temperature | 80°C |
| Minimum ambient temperature | -20°C |
| Number of pneumatic connections | 2 pcs. |
| Pneumatic input connection | M5 |
| Mode of operation of drive | Double acting |
| Maximum piston speed | 1500 mm/s |
| Type of cushioning | Air cushion |
| Type of Stroke end | Double rod |
| Piston rod end | External thread |
| Male thread of rod end | M6 |
| Weight | 0.102 Kg |

Specifications are subject to change without prior notice and any obligation on the part of the manufacturer.



SMC CORPORATION Zuazobidea 14, 01012, Vitoria-Gasteiz, Álava +34 945184100 +34 945184126 www.smc.eu support.marketingeurope@smc.com

# Dimensions

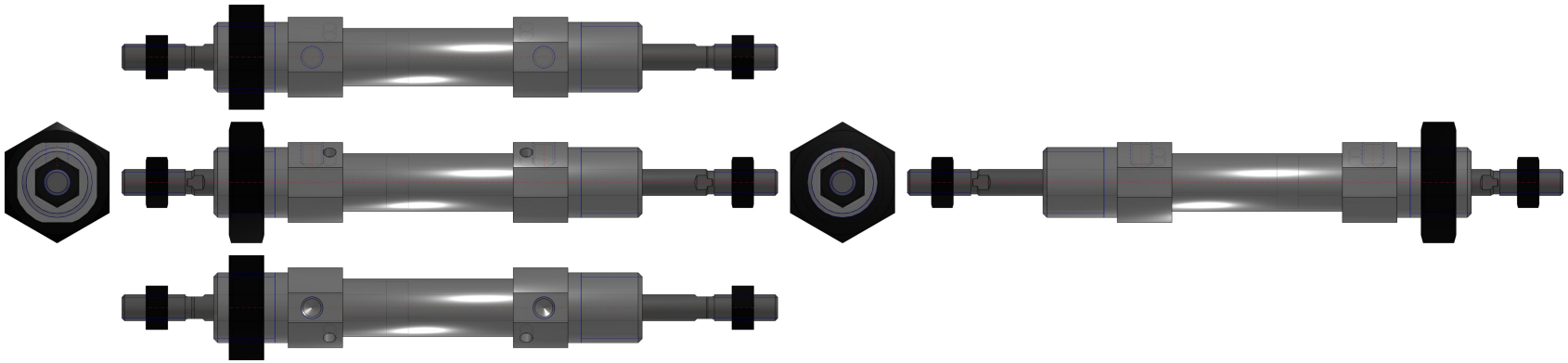

Specifications are subject to change without prior notice and any obligation on the part of the manufacturer.



SMC CORPORATION Zuazobidea 14, 01012, Vitoria-Gasteiz, Álava +34 945184100 +34 945184126 www.smc.eu support.marketingeurope@smc.com

# Constructions

### Double acting: Double rod
### C□85WE 10 to 16 Air cushion (Disassembly is not possible)

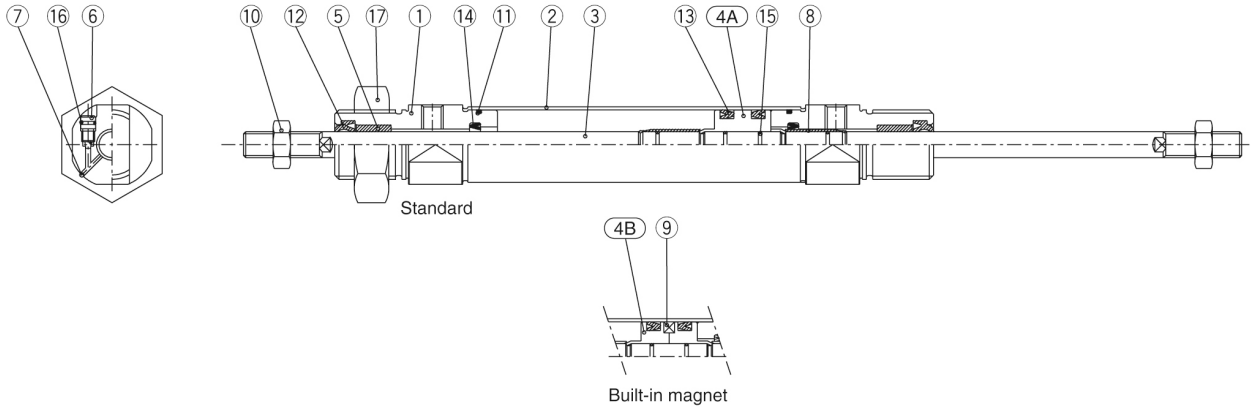


### Component Parts

| No. | Description | Material | Quantity | Remarks |
|---|---|---|---|---|
| ① | Rod cover | Aluminum alloy | 2 | White anodized |
| ② | Cylinder tube | Stainless steel | 1 | |
| ③ | Piston rod | Stainless steel | 1 | |
| (4A) | Piston A | Brass | 1 | |
| (4B) | Piston B | Brass | 2 | (Switch style piston) |
| ⑤ | Bushing | Sintered bronze | 2 | |
| ⑥ | Cushion needle | Stainless steel | 2 | |
| ⑦ | Steel ball | Bearing steel | 2 | |
| ⑧ | Cushion ring | Brass | 2 | |

| No. | Description | Material | Quantity | Remarks |
|---|---|---|---|---|
| ⑨ | Magnet | | 1 | |
| ⑩ | Rod end nut | Carbon steel | 2 | Nickel plated |
| ⑪ | Tube gasket | NBR | 2 | |
| ⑫ | Rod seal | NBR | 2 | |
| ⑬ | Piston seal | NBR | 2 | |
| ⑭ | Check seal | NBR | 2 | |
| ⑮ | Piston gasket & cushion ring gasket | NBR | 3 | |
| ⑯ | Needle seal | NBR | 2 | |
| ⑰ | Mounting nut | Carbon steel | 1 | Nickel plated |

Specifications are subject to change without prior notice and any obligation on the part of the manufacturer.



SMC CORPORATION Zuazobidea 14, 01012, Vitoria-Gasteiz, Álava +34 945184100 +34 945184126 www.smc.eu support.marketingeurope@smc.com

## Additional information

| | |
|---|---|
| Catalogue | VDMA-C85_EU.pdf |

Specifications are subject to change without prior notice and any obligation on the part of the manufacturer.



SMC CORPORATION Zuazobidea 14, 01012, Vitoria-Gasteiz, Álava +34 945184100 +34 945184126 www.smc.eu support.marketingeurope@smc.com