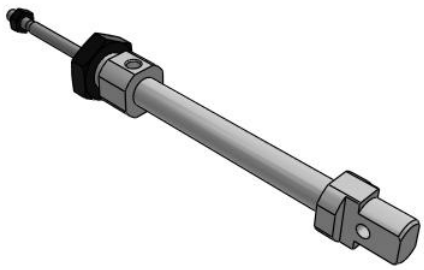

# C(D)85-S/T, ISO Cylinder, Single Acting, Single Rod

## C85N8-25T

Datasheet

## General series information

- Single acting, single rod, spring return/spring extend
- Conforms to ISO standard 6432
- Bore sizes (mm): 8, 10, 12, 16, 20, 25
- Standard strokes up to 150mm
- Auto switch capable

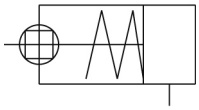

*Single-acting cylinder, non rotating single piston rod, return stroke by spring*

## Standard specifications

| | |
|---|---|
| Magnet | None |
| Mounting | N (Basic Integrated Clevis) |
| Bore Size | Ø8 mm |
| Stroke | 25 |
| Action | T (Spring Extend) |
| Switch Mounting | None |
| Auto Switch | No Switch |
| Lead Wire or Prewired Connector | 0.5m (Or None in the Case of No Switch) |
| Number | 2 pcs. (Or None in the Case of No Switch) |
| Rod End Options | None |
| Made of Stainless Steel | None |
| Pressure medium | Compressed air |
| Maximum temperature of pressure medium | 80°C |
| Minimum temperature of pressure medium | -20°C |
| Maximum operating pressure | 1 MPa |
| Minimum operating pressure | 0.22 Mpa |
| Proof pressure | 1.5 MPa |
| Maximum ambient temperature | 80°C |

*Specifications are subject to change without prior notice and any obligation on the part of the manufacturer.*



**SMC CORPORATION** Zuazobidea 14, 01012, Vitoria-Gasteiz, Álava +34 945184100 +34 945184126 www.smc.eu support.marketingeurope@smc.com

| | |
|---|---|
| Minimum ambient temperature | -20°C |
| Number of pneumatic connections | 1 pc. |
| Pneumatic input connection | M5 |
| Pneumatic output connection | M5 |
| Mode of operation of drive single | Single acting, spring extend |
| Maximum piston speed | 1500 mm/s |
| Type of cushioning | Rubber bumper |
| Piston rod end | External thread |
| Geometric form of the piston rod | Single rod |
| Male thread of rod end | M4 |

Specifications are subject to change without prior notice and any obligation on the part of the manufacturer.



SMC CORPORATION Zuazobidea 14, 01012, Vitoria-Gasteiz, Álava +34 945184100 +34 945184126 www.smc.eu support.marketingeurope@smc.com

# Dimensions

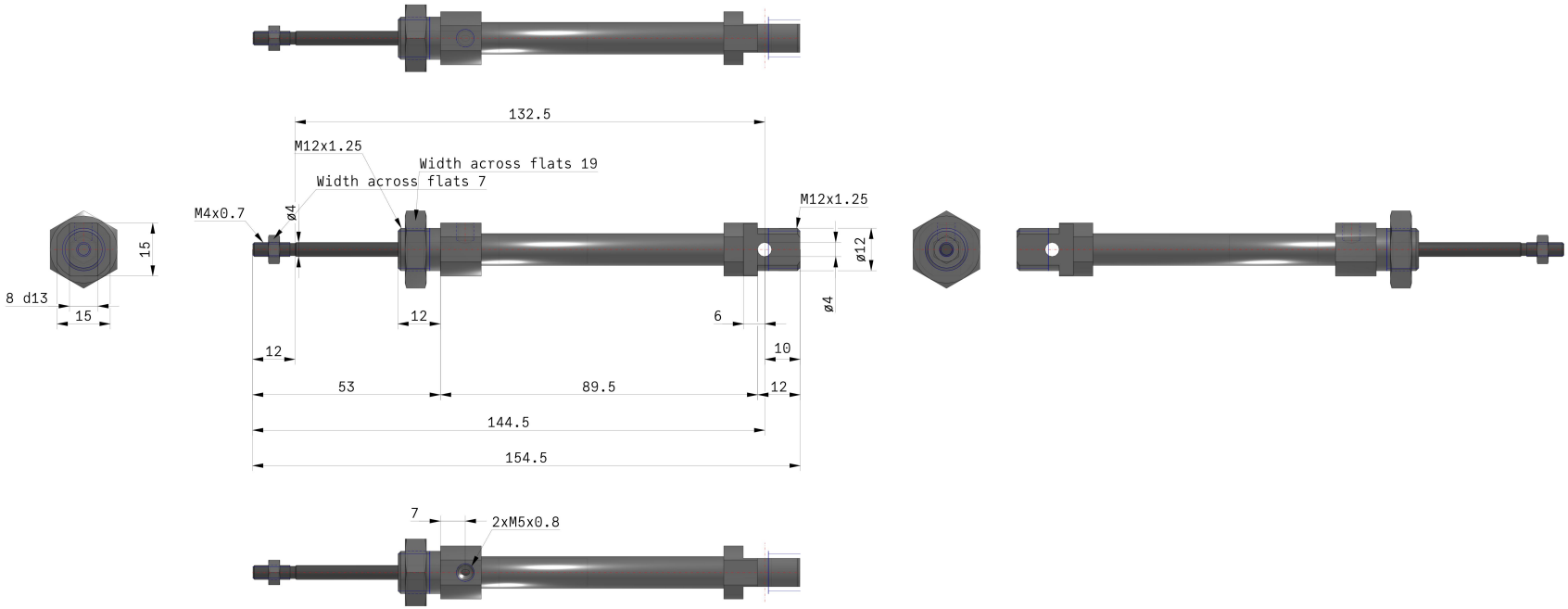


Specifications are subject to change without prior notice and any obligation on the part of the manufacturer.



SMC CORPORATION Zuazobidea 14, 01012, Vitoria-Gasteiz, Álava +34 945184100 +34 945184126 www.smc.eu support.marketingeurope@smc.com

# Constructions

### Single acting: Single rod
### Spring return/C□85□8 to 16-□S (Disassembly is not possible)

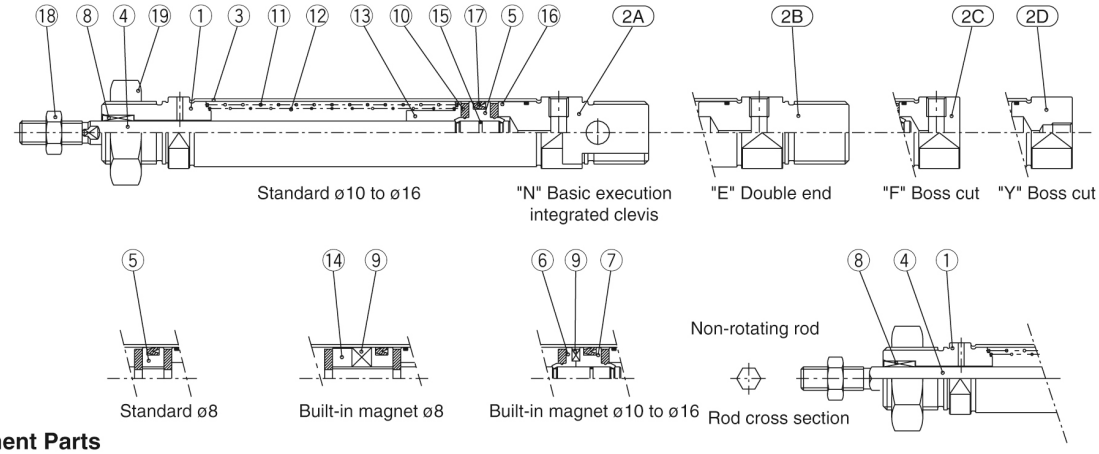


### Component Parts

| No. | Description | Material | Quantity | Remarks |
|---|---|---|---|---|
| ① | Rod cover | Aluminum alloy | 1 | White anodized |
| 2A | Head cover N | Aluminum alloy | 1 | White anodized |
| 2B | Head cover E | Aluminum alloy | 1 | White anodized |
| 2C | Head cover F | Aluminum alloy | 1 | White anodized |
| 2D | Head cover Y | Aluminum alloy | 1 | White anodized |
| ③ | Cylinder tube | Stainless steel | 1 | |
| ④ | Piston rod | Stainless steel | 1 | |
| ⑤ | Piston | Brass | 1 | |
| ⑥ | Piston A | Brass | 1 | (Switch style only) |
| ⑦ | Piston B | Brass | 1 | (Switch style only) |
| ⑧ | Bushing | Sintered bronze | 1 | |

| No. | Description | Material | Quantity | Remarks |
|---|---|---|---|---|
| ⑨ | Magnet | | 1 | (Switch style only) |
| ⑩ | Bumper | Urethane | 2 | |
| ⑪ | Return spring A | Piano wire | 1 | |
| ⑫ | Return spring B | Piano wire | 1 | |
| ⑬ | Spring guide | Brass | 1 | |
| ⑭ | Spacer | Brass | 1 | |
| ⑮ | Piston gasket | NBR | 1 | |
| ⑯ | Tube gasket | NBR | 1 | |
| ⑰ | Piston seal | NBR | 1 | |
| ⑱ | Rod end nut | Carbon steel | 1 | Nickel plated |
| ⑲ | Mounting nut | Carbon steel | 1 | Nickel plated |

Specifications are subject to change without prior notice and any obligation on the part of the manufacturer.



SMC CORPORATION Zuazobidea 14, 01012, Vitoria-Gasteiz, Álava +34 945184100 +34 945184126 www.smc.eu support.marketingeurope@smc.com

## Additional information

Catalogue VDMA-C85_EU.pdf

Specifications are subject to change without prior notice and any obligation on the part of the manufacturer.



SMC CORPORATION Zuazobidea 14, 01012, Vitoria-Gasteiz, Álava +34 945184100 +34 945184126 www.smc.eu support.marketingeurope@smc.com