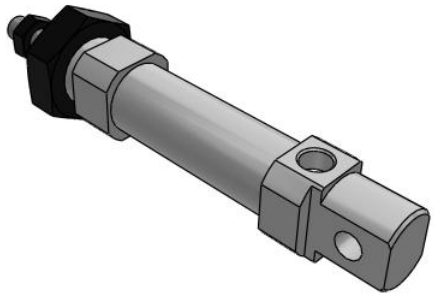

C(D)85-S/T, ISO Cylinder, Single Acting, Single Rod

C85N20-25S

Datasheet

General series information

- Single acting, single rod, spring return/spring extend
- Conforms to ISO standard 6432
- Bore sizes (mm): 8, 10, 12, 16, 20, 25
- Standard strokes up to 150mm
- Auto switch capable

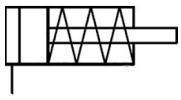

Single-acting cylinder, single piston rod, return stroke by spring

Standard specifications

Mounting	N (Basic Integrated Clevis)
Bore Size	Ø20 mm
Stroke	25
Action	S (Spring Return)
Switch Mounting	None
Lead Wire or Prewired Connector	0.5m (Or None in the Case of No Switch)
Number	2 pcs. (Or None in the Case of No Switch)
Magnet	None
Rod End Options	None
Made of Stainless Steel	None
Auto Switch	No Switch
Pressure medium	Compressed air
Maximum temperature of pressure medium	80°C
Minimum temperature of pressure medium	-20°C
Maximum operating pressure	1 MPa
Minimum operating pressure	0.18 Mpa
Proof pressure	1.5 MPa
Maximum ambient temperature	80°C

Specifications are subject to change without prior notice and any obligation on the part of the manufacturer.

SMC United Kingdom +34 945184126 sales@smc.uk

Minimum ambient temperature	-20°C
Number of pneumatic connections	1 pc.
Pneumatic input connection	G 1/8
Pneumatic output connection	G 1/8
Mode of operation of drive single	Single acting, spring return
Maximum piston speed	1500 mm/s
Type of cushioning	Rubber bumper
Piston rod end	External thread
Geometric form of the piston rod	Single rod
Male thread of rod end	M8
Weight	0.173 Kg

Specifications are subject to change without prior notice and any obligation on the part of the manufacturer.

SMC United Kingdom +34 945184126 sales@smc.uk

Dimensions

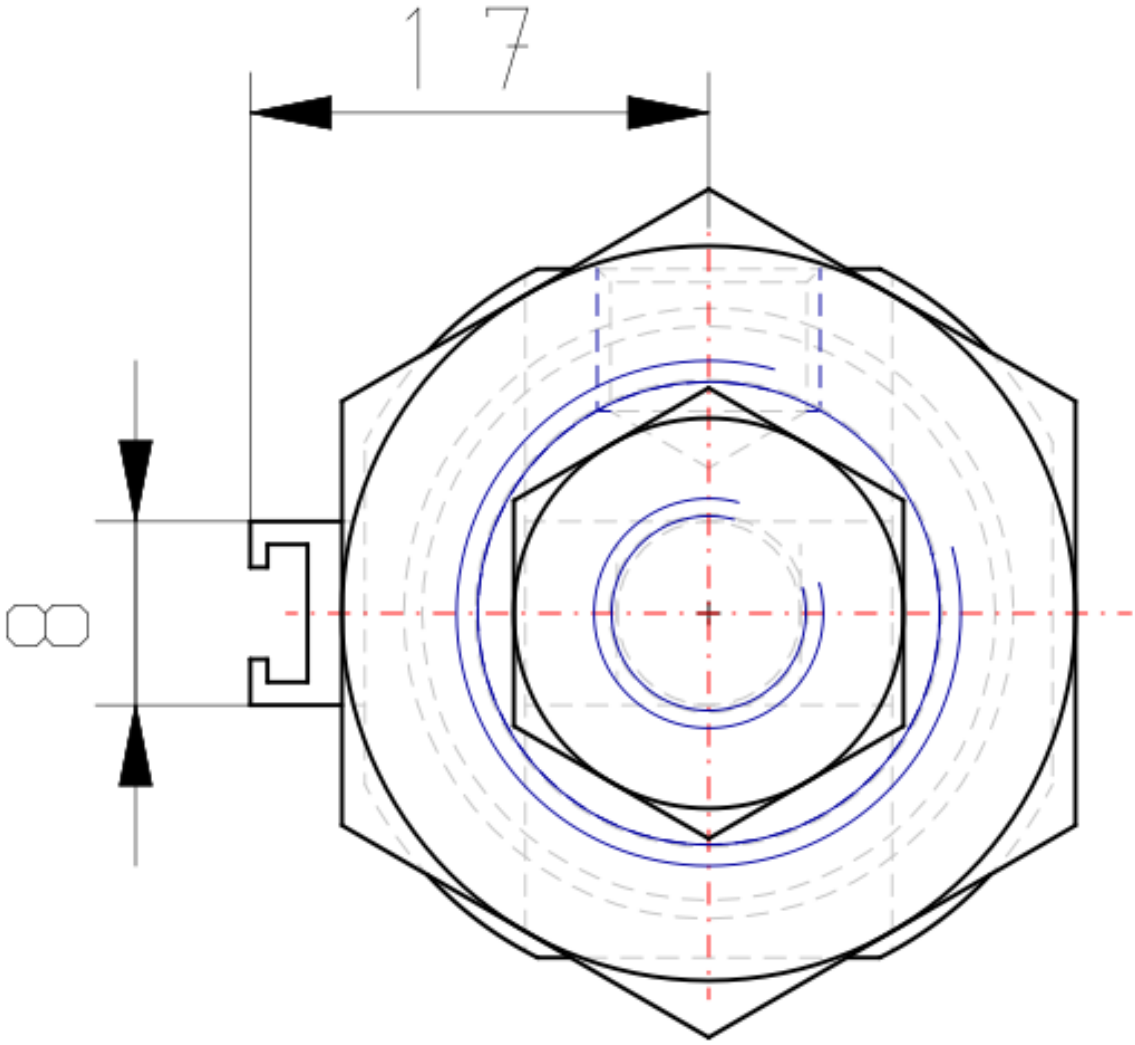

Specifications are subject to change without prior notice and any obligation on the part of the manufacturer.

SMC United Kingdom +34 945184126 sales@smc.uk

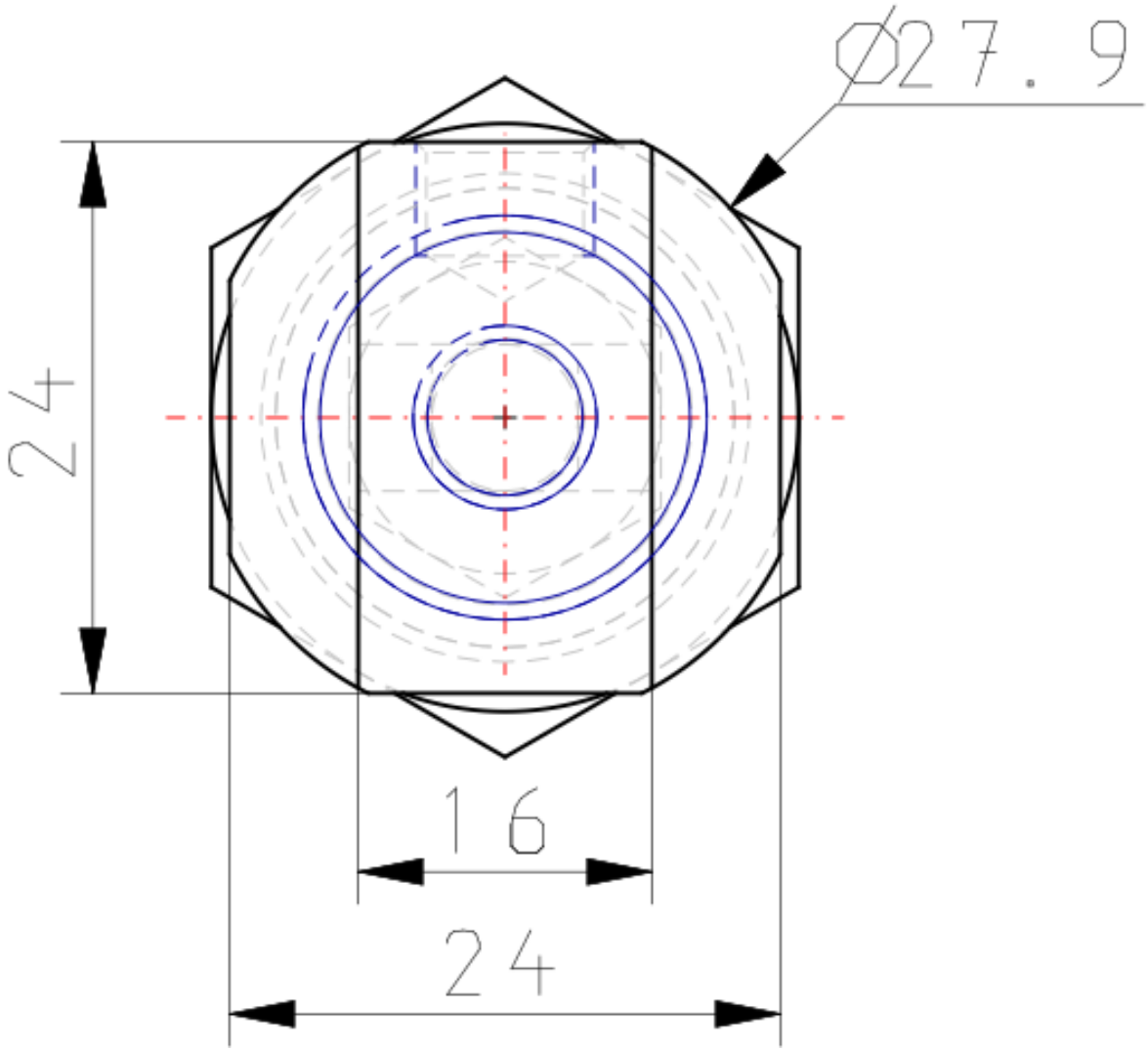

Specifications are subject to change without prior notice and any obligation on the part of the manufacturer.

SMC United Kingdom +34 945184126 sales@smc.uk

Constructions

Single acting: Single rod
Spring return/C□85□20, 25-□S

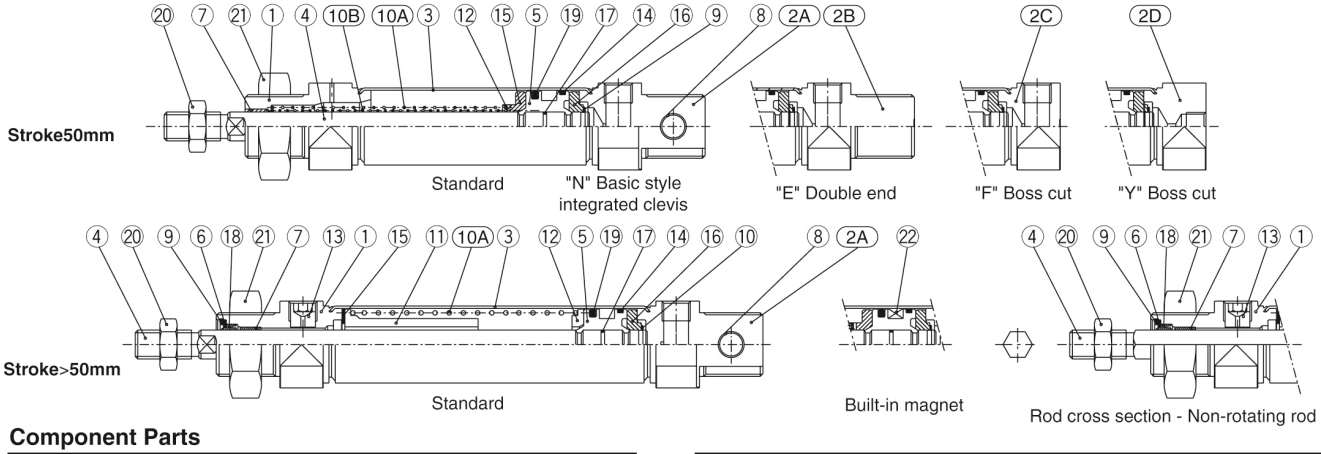

Component Parts

No.	Description	Material	Quantity	Remarks
①	Rod cover	Aluminum alloy	1	White anodized
2A	Head cover N	Aluminum alloy	1	White anodized
2B	Head cover E	Aluminum alloy	1	White anodized
2C	Head cover F	Aluminum alloy	1	White anodized
2D	Head cover Y	Aluminum alloy	1	White anodized
③	Cylinder tube	Stainless steel	1	
④	Piston rod	Carbon steel*	1	Hard chrome plated
⑤	Piston	Aluminum alloy	1	Chromated
⑥	Plain washer	Carbon steel	1	Nickel plated
⑦	Bushing	Sintered bronze	1	
⑧	Bushing	Sintered bronze	1	
⑨	Retaining ring	Carbon steel	1	Nickel plated
10A	Return spring A	Piano wire	1	Zinc chromated

* Stainless steel (Non-rotating rod)

No.	Description	Material	Quantity	Remarks
10B	Return spring B	Piano wire	1	Zinc chromated
⑪	Spring guide	Aluminum alloy	1	
⑫	Spring holder	Aluminum alloy	1	
⑬	Set screw	Carbon steel	1	
⑭	Wear ring	Phenolic resin	1	
⑮	Bumper A	Urethane	1	
⑯	Bumper B	Urethane	1	
⑰	Piston gasket	NBR	1	
⑱	Rod seal	NBR	1	
⑲	Piston seal	NBR	1	
⑳	Rod end nut	Carbon steel	1	Nickel plated
㉑	Mounting nut	Carbon steel	1	Nickel plated
㉒	Magnet		1	(Switch style only)

Specifications are subject to change without prior notice and any obligation on the part of the manufacturer.

SMC United Kingdom +34 945184126 sales@smc.uk

Additional information

Catalogue	C85_C75-A_EU.pdf

Specifications are subject to change without prior notice and any obligation on the part of the manufacturer.

SMC United Kingdom +34 945184126 sales@smc.uk