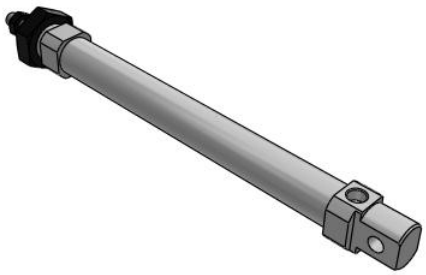

# C(D)85-S/T, ISO Cylinder, Single Acting, Single Rod

C85N20-100S

Datasheet

## General series information

- Single acting, single rod, spring return/spring extend
- Conforms to ISO standard 6432
- Bore sizes (mm): 8, 10, 12, 16, 20, 25
- Standard strokes up to 150mm
- Auto switch capable

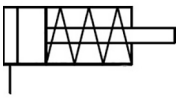

*Single-acting cylinder, single piston rod, return stroke by spring*

## Standard specifications

| | |
|---|---|
| Mounting | N (Basic Integrated Clevis) |
| Bore Size | Ø20 mm |
| Stroke | 100 |
| Action | S (Spring Return) |
| Switch Mounting | None |
| Number | 2 pcs. (Or None in Case of No Switch) |
| Magnet | None |
| Rod End Options | None |
| Made of Stainless Steel | None |
| Lead Wire or Pre-wired Connector | 0.5 m (Or None in the Case of No Switch) |
| Auto Switch | No Switch |
| Pressure medium | Compressed air |
| Maximum temperature of pressure medium | 80°C |
| Minimum temperature of pressure medium | -20°C |
| Maximum operating pressure | 1 MPa |
| Minimum operating pressure | 0.18 Mpa |
| Proof pressure | 1.5 MPa |
| Maximum ambient temperature | 80°C |

*Specifications are subject to change without prior notice and any obligation on the part of the manufacturer.*



SMC United Kingdom +34 945184126 sales@smc.uk

| | |
|---|---|
| Minimum ambient temperature | -20°C |
| Number of pneumatic connections | 1 pc. |
| Pneumatic input connection | G 1/8 |
| Pneumatic output connection | G 1/8 |
| Mode of operation of drive single | Single acting, spring return |
| Maximum piston speed | 1500 mm/s |
| Type of cushioning | Rubber bumper |
| Piston rod end | External thread |
| Geometric form of the piston rod | Single rod |
| Male thread of rod end | M8 |
| Weight | 0.310 Kg |

Specifications are subject to change without prior notice and any obligation on the part of the manufacturer.



SMC United Kingdom +34 945184126 sales@smc.uk

# Dimensions

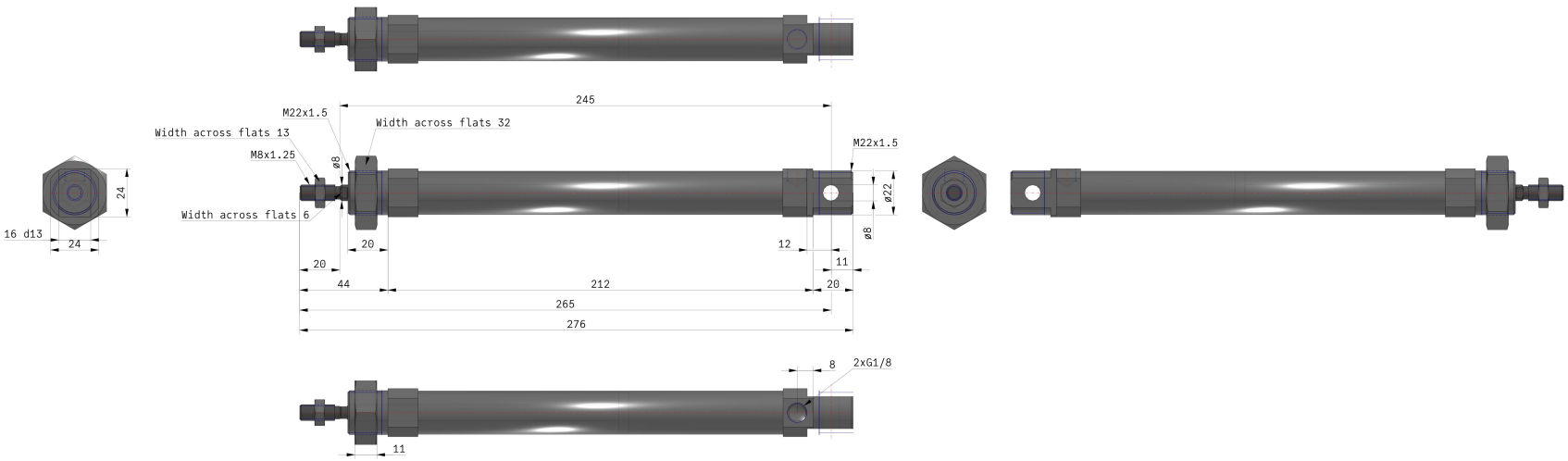


Specifications are subject to change without prior notice and any obligation on the part of the manufacturer.



SMC United Kingdom +34 945184126 sales@smc.uk

# Constructions

## Single acting: Single rod
## Spring return/C□85□20, 25-□S

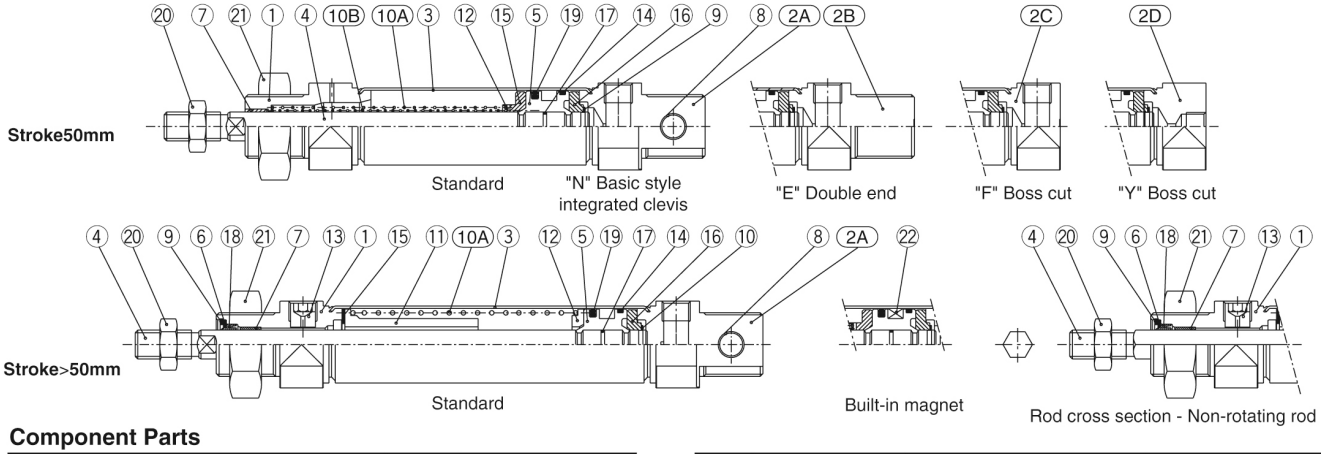


### Component Parts

| No. | Description | Material | Quantity | Remarks |
|---|---|---|---|---|
| ① | Rod cover | Aluminum alloy | 1 | White anodized |
| 2A | Head cover N | Aluminum alloy | 1 | White anodized |
| 2B | Head cover E | Aluminum alloy | 1 | White anodized |
| 2C | Head cover F | Aluminum alloy | 1 | White anodized |
| 2D | Head cover Y | Aluminum alloy | 1 | White anodized |
| ③ | Cylinder tube | Stainless steel | 1 | |
| ④ | Piston rod | Carbon steel* | 1 | Hard chrome plated |
| ⑤ | Piston | Aluminum alloy | 1 | Chromated |
| ⑥ | Plain washer | Carbon steel | 1 | Nickel plated |
| ⑦ | Bushing | Sintered bronze | 1 | |
| ⑧ | Bushing | Sintered bronze | 1 | |
| ⑨ | Retaining ring | Carbon steel | 1 | Nickel plated |
| 10A | Return spring A | Piano wire | 1 | Zinc chromated |

* Stainless steel (Non-rotating rod)

| No. | Description | Material | Quantity | Remarks |
|---|---|---|---|---|
| 10B | Return spring B | Piano wire | 1 | Zinc chromated |
| ⑪ | Spring guide | Aluminum alloy | 1 | |
| ⑫ | Spring holder | Aluminum alloy | 1 | |
| ⑬ | Set screw | Carbon steel | 1 | |
| ⑭ | Wear ring | Phenolic resin | 1 | |
| ⑮ | Bumper A | Urethane | 1 | |
| ⑯ | Bumper B | Urethane | 1 | |
| ⑰ | Piston gasket | NBR | 1 | |
| ⑱ | Rod seal | NBR | 1 | |
| ⑲ | Piston seal | NBR | 1 | |
| ⑳ | Rod end nut | Carbon steel | 1 | Nickel plated |
| ㉑ | Mounting nut | Carbon steel | 1 | Nickel plated |
| ㉒ | Magnet | | 1 | (Switch style only) |

Specifications are subject to change without prior notice and any obligation on the part of the manufacturer.



SMC United Kingdom +34 945184126 sales@smc.uk

## Additional information

Catalogue C85_C75-A_EU.pdf

Specifications are subject to change without prior notice and any obligation on the part of the manufacturer.



SMC United Kingdom +34 945184126 sales@smc.uk