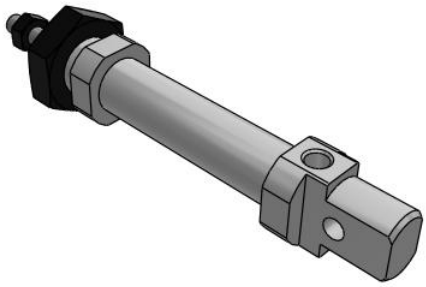

C(D)85-S/T, ISO Cylinder, Single Acting, Single Rod

C85N10-10S

Datasheet

General series information

- Single acting, single rod, spring return/spring extend
- Conforms to ISO standard 6432
- Bore sizes (mm): 8, 10, 12, 16, 20, 25
- Standard strokes up to 150mm
- Auto switch capable

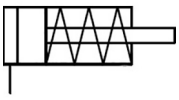

Single-acting cylinder, single piston rod, return stroke by spring

Standard specifications

Mounting	N (Basic Integrated Clevis)
Bore Size	Ø10 mm
Stroke	10
Action	S (Spring Return)
Switch Mounting	None
Lead Wire or Prewired Connector	0.5m (Or None in the Case of No Switch)
Number	2 pcs. (Or None in the Case of No Switch)
Magnet	None
Rod End Options	None
Made of Stainless Steel	None
Auto Switch	No Switch
Pressure medium	Compressed air
Maximum temperature of pressure medium	80°C
Minimum temperature of pressure medium	-20°C
Maximum operating pressure	1 MPa
Minimum operating pressure	0.18 Mpa
Proof pressure	1.5 MPa
Maximum ambient temperature	80°C

Specifications are subject to change without prior notice and any obligation on the part of the manufacturer.

SMC United Kingdom +34 945184126 sales@smc.uk

Minimum ambient temperature	-20°C
Number of pneumatic connections	1 pc.
Pneumatic input connection	M5
Pneumatic output connection	M5
Mode of operation of drive single	Single acting, spring return
Maximum piston speed	1500 mm/s
Type of cushioning	Rubber bumper
Piston rod end	External thread
Geometric form of the piston rod	Single rod
Male thread of rod end	M4
Weight	0.047 Kg

Specifications are subject to change without prior notice and any obligation on the part of the manufacturer.

SMC United Kingdom +34 945184126 sales@smc.uk

Dimensions

単動-押出し
C□85 [チューブ内径] − [ストローク] S − □
磁石なし／磁石内蔵

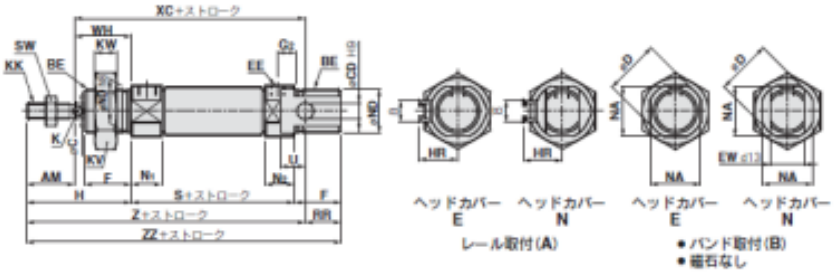

C□85KN, C□85KE
ロッド回り止め形

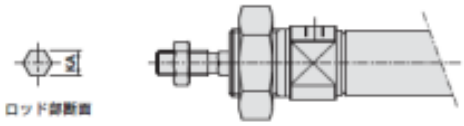

寸法表 (mm)

チューブ内径	AM	BE	C	CD	D	EE	EW	F	G2	H	HR	K	KA	KK	KV	KW	N1	N2	NA	ND	RR	SW	U	WH
8	12	M12×1.25	4	4	16.7	M5×0.8	8	12	5	28	10	—	4.2	M4×0.7	19	6	5.5	9.5	15	12	10	7	6	16
10	12	M12×1.25	4	4	16.7	M5×0.8	8	12	5	28	10.5	—	4.2	M4×0.7	19	6	5.5	9.5	15	12	10	7	6	16
12	16	M16×1.5	6	6	19.7	M5×0.8	12	17	6	38	14	5	6.2	M6×1	24	8	5.5	10.5	18.3	16	14	10	9	22
16	16	M16×1.5	6	6	19.7	M5×0.8	12	17	6	38	14	5	6.2	M6×1	24	8	5.5	10.5	18.3	16	13	10	9	22
20	20	M22×1.5	8	8	28	G 1/8	16	20	8	44	17	6	8.2	M8×1.25	32	11	15	15	24	22	11	13	12	24
25	22	M22×1.5	10	8	33.5	G 1/8	16	22	8	50	20	8	10.2	M10×1.25	32	11	15	15	30	22	11	17	12	28

チューブ内径	S			XC			Z			ZZ		
	1−50	51−100	101−150	1−50	51−100	101−150	1−50	51−100	101−150	1−50	51−100	101−150
8	46(52)(56(62))	—	—	64(70)(74(80))	—	—	76(82)(86(92))	—	—	86(92)(96(102))	—	—
10	46(50)(56(60))	—	—	64(68)(74(78))	—	—	76(80)(86(90))	—	—	86(90)(96(100))	—	—
12	50(53.5) 60(63.5)]	—	—	75(78.5) 85(88.5)]	—	—	91(94.5) 101(104.5)]	—	—	105(108.5) 115(118.5)]	—	—
16	56(59.5) 66(69.5)]	71.5(75) 92(95.5)]	87(90.5) 118(121.5)]	82(85.5) 92(95.5)]	97.5(101) 118(121.5)]	113(116.5) 144(147.5)]	98(101.5) 108(111.5)]	113.5(117) 134(137.5)]	129(132.5) 160(163.5)]	111(114.5) 121(124.5)]	126.5(130) 147(150.5)]	142(145.5) 173(176.5)]
20	62(87)	112	137	95(120)	145	170	115(140)	165	190	126(151)	176	201
25	65(88.5)	113.5	138.5	104(127.5)	152.5	177.5	126(149.5)	174.5	199.5	137(160.5)	185.5	210.5

( )内はオートスイッチ付の場合。[ ]内はロッド回り止め形の場合。

Specifications are subject to change without prior notice and any obligation on the part of the manufacturer.

SMC United Kingdom +34 945184126 sales@smc.uk

Constructions

Single acting: Single rod
Spring return/C□85□8 to 16-□S (Disassembly is not possible)

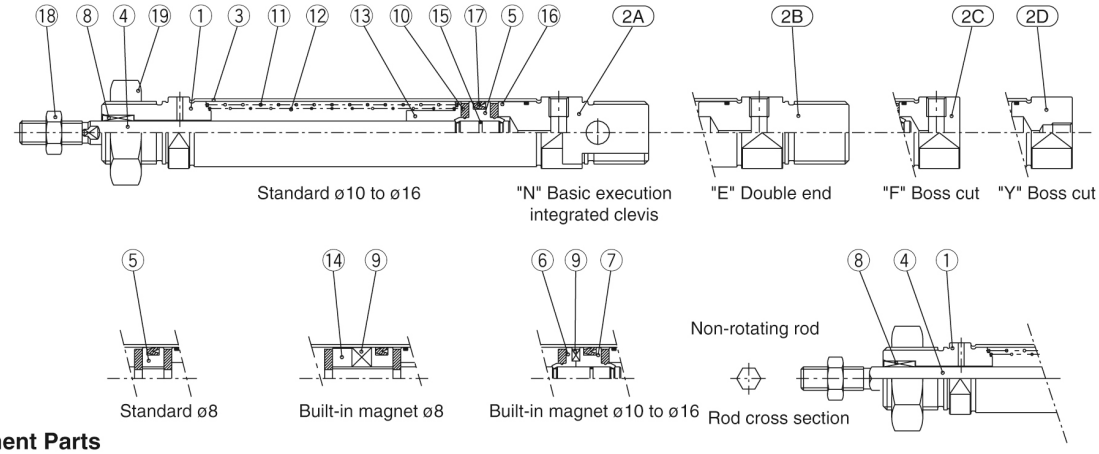

Component Parts

No.	Description	Material	Quantity	Remarks
①	Rod cover	Aluminum alloy	1	White anodized
2A	Head cover N	Aluminum alloy	1	White anodized
2B	Head cover E	Aluminum alloy	1	White anodized
2C	Head cover F	Aluminum alloy	1	White anodized
2D	Head cover Y	Aluminum alloy	1	White anodized
③	Cylinder tube	Stainless steel	1	
④	Piston rod	Stainless steel	1	
⑤	Piston	Brass	1	
⑥	Piston A	Brass	1	(Switch style only)
⑦	Piston B	Brass	1	(Switch style only)
⑧	Bushing	Sintered bronze	1	

No.	Description	Material	Quantity	Remarks
⑨	Magnet		1	(Switch style only)
⑩	Bumper	Urethane	2	
⑪	Return spring A	Piano wire	1	
⑫	Return spring B	Piano wire	1	
⑬	Spring guide	Brass	1	
⑭	Spacer	Brass	1	
⑮	Piston gasket	NBR	1	
⑯	Tube gasket	NBR	1	
⑰	Piston seal	NBR	1	
⑱	Rod end nut	Carbon steel	1	Nickel plated
⑲	Mounting nut	Carbon steel	1	Nickel plated

Specifications are subject to change without prior notice and any obligation on the part of the manufacturer.

SMC United Kingdom +34 945184126 sales@smc.uk

Additional information

Catalogue C85_C75-A_EU.pdf

Specifications are subject to change without prior notice and any obligation on the part of the manufacturer.

SMC United Kingdom +34 945184126 sales@smc.uk