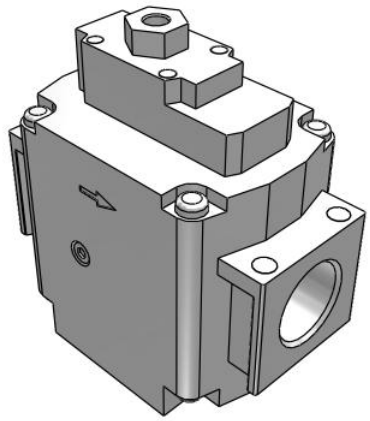

Soft Start Valve, Air Operated Type - AVA-A

AVA5000-F10-A

Datasheet

General series information

- Flow rate up to 11908 l/min (ANR)
- Optional built-in silencer
- Operating pressure range: 0.2 to 1.0 MPa
- IP65 enclosure.

Standard specifications

Body Size	5000
Port Size	10 (1)
Flow Direction/Pressure Unit	Flow direction: left to right
Option	None
Thread	F (G)
Pressure medium	Air
Maximum temperature of pressure medium	50 °C
Minimum temperature of pressure medium	0 °C
Maximum ambient temperature	50 °C
Minimum ambient temperature	0 °C
Approvals	CE
Protection class with connector	Dust-protected (DIN terminal: IP65)
Weight	1.270 Kg

Specifications are subject to change without prior notice and any obligation on the part of the manufacturer.

SMC United Kingdom +34 945184126 sales@smc.uk

Dimensions

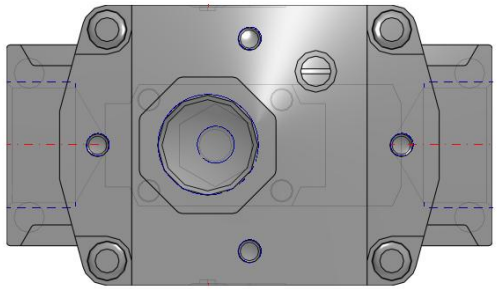

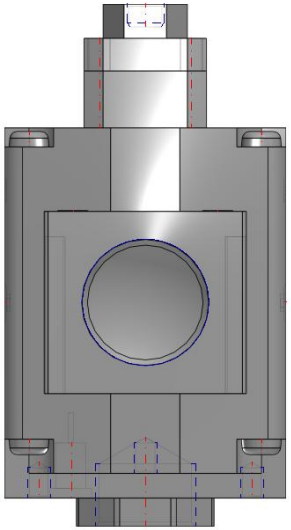

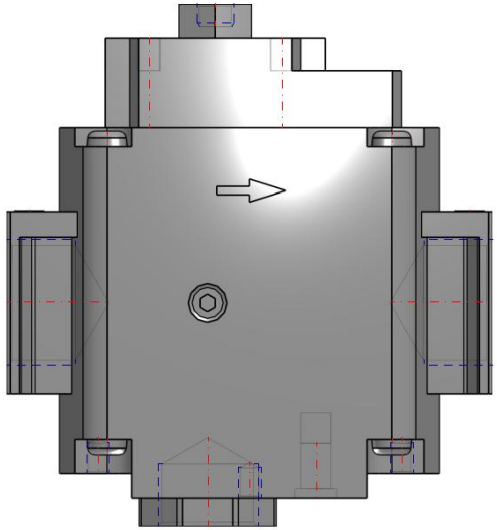

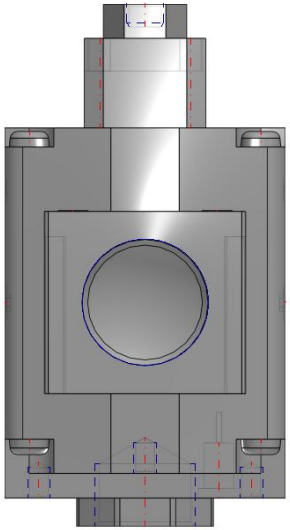

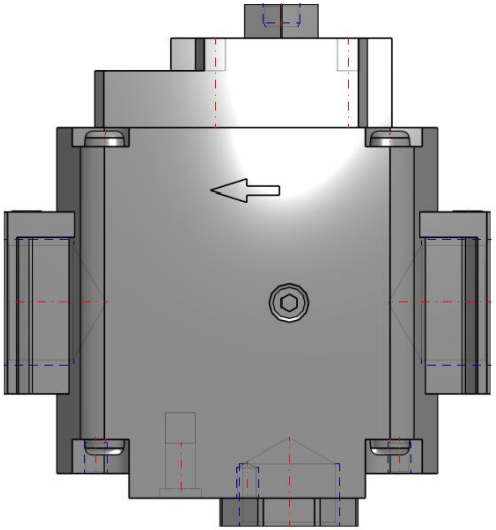

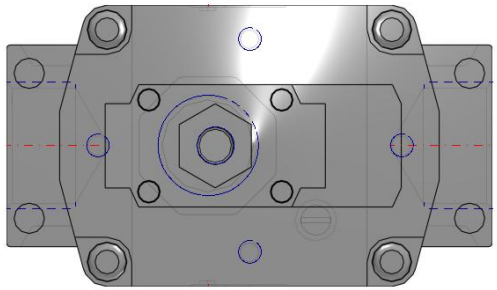

Specifications are subject to change without prior notice and any obligation on the part of the manufacturer.

Additional information

Catalogue	AV2-3-4-5000-A-B_EU.pdf
Declaration of conformity	newDoC_AVL_TF1Z007EN.pdf newDoC_AV-A_TF1V02EN.pdf newDoC_AV_TF125-81EN.pdf newDoC_AVL_TF122115EN.pdf newDoC_AV-A_TF122111EN.pdf
Installation manuals	IM_AVL-A_TF2Z462EN-C.pdf
Operation manuals	OM_AVx-A_OMZ0091EN-G.pdf

Specifications are subject to change without prior notice and any obligation on the part of the manufacturer.

SMC United Kingdom +34 945184126 sales@smc.uk