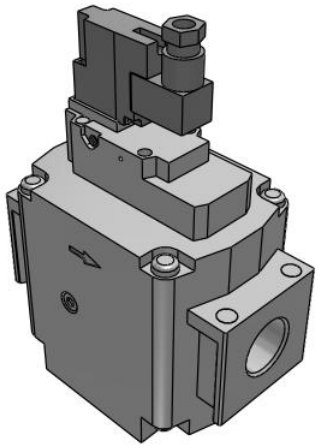

# AV2000/3000/4000/5000-A, Soft Start-up Valve

## AV5000-F06S-5YZB-A

Datasheet

## General series information

- Power consumption: 0,35 W
- Improved flow rate characteristics: Up to 2,3 times C[$dm^3$/ (s·bar)]: 9,2
- Energy saving: No air flow when the main valve is switched
- Improved adjustability at low speed air supply
- Smaller profile and less work hours due to integrated silencer.

## Standard specifications

| | |
|---|---|
| Body Size | 5000 |
| Thread | F (G) |
| Port Size | 06 (3/4) |
| Option | S (Silencer) |
| Rated Voltage | 5 (24 VDC) |
| Electrical Entry | Y (Type Y, DIN Terminal w/Connector) |
| Surge Suppressor | Z (With light/surge voltage suppressor) |
| Manual Override | B (Push-locking slotted style) |
| Flow Direction/Pressure Unit | Flow direction: left to right |
| Pressure medium | Air |
| Maximum temperature of pressure medium | 50 °C |
| Minimum temperature of pressure medium | 0 °C |
| Maximum operating pressure | 1 MPa |
| Minimum operating pressure | 0.2 MPa |
| Proof pressure | 1.5 MPa |
| Maximum ambient temperature | 50 °C |
| Minimum ambient temperature | 0 °C |
| Approvals | CE |

Specifications are subject to change without prior notice and any obligation on the part of the manufacturer.



SMC CORPORATION Zuazobidea 14, 01012, Vitoria-Gasteiz, Álava +34 945184100 +34 945184126 www.smc.eu emcmarketing@smc.smces.es

| | |
|---|---|
| Protection class with connector | Dust-protected (DIN terminal: IP65) |
| Pneumatic input connection | G 3/4 |
| Pneumatic output connection | G 3/4 |
| Pneumatic exhaust connection | G 3/4 |
| Flow rate | 11908 l/min (ANR) |
| Critical pressure ratio | 0.66 |
| Sonic conductance dm3/(s·bar) | 34.8 |
| Type of electrical connector | Type Y (DIN terminal/With connector) |
| Manual override | R 1/4 |
| Weight | 1.300 Kg |

Specifications are subject to change without prior notice and any obligation on the part of the manufacturer.



SMC CORPORATION Zuazobidea 14, 01012, Vitoria-Gasteiz, Álava +34 945184100 +34 945184126 www.smc.eu emcmarketing@smc.smces.es

# Dimensions

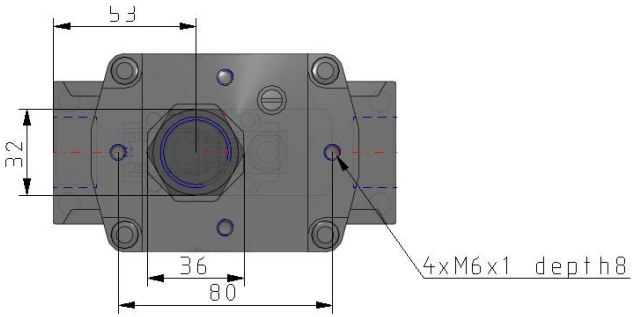


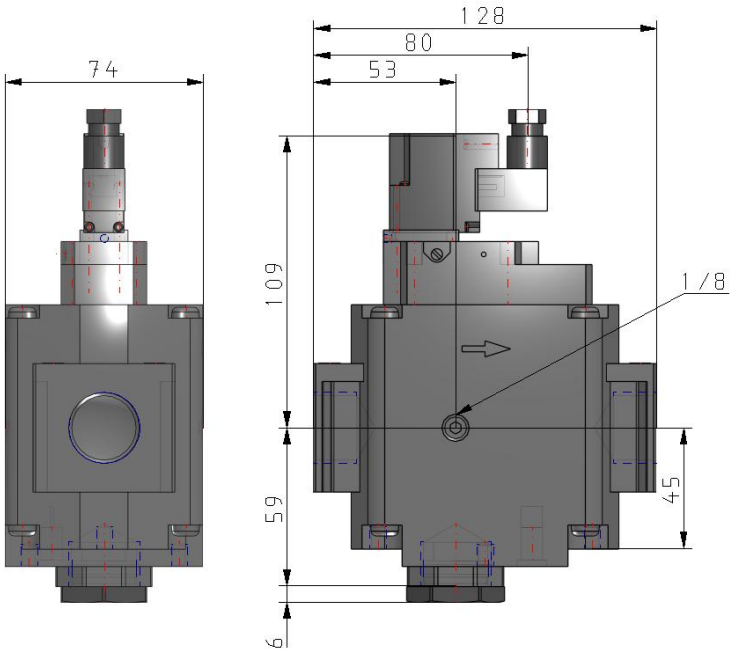


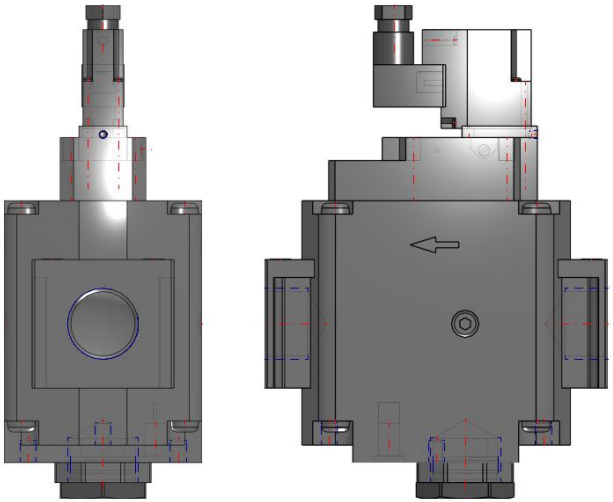

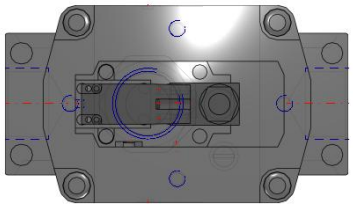

Specifications are subject to change without prior notice and any obligation on the part of the manufacturer.



**SMC CORPORATION** Zuazobidea 14, 01012, Vitoria-Gasteiz, Álava +34 945184100 +34 945184126 www.smc.eu emcmarketing@smc.smces.es

# Constructions

## Construction

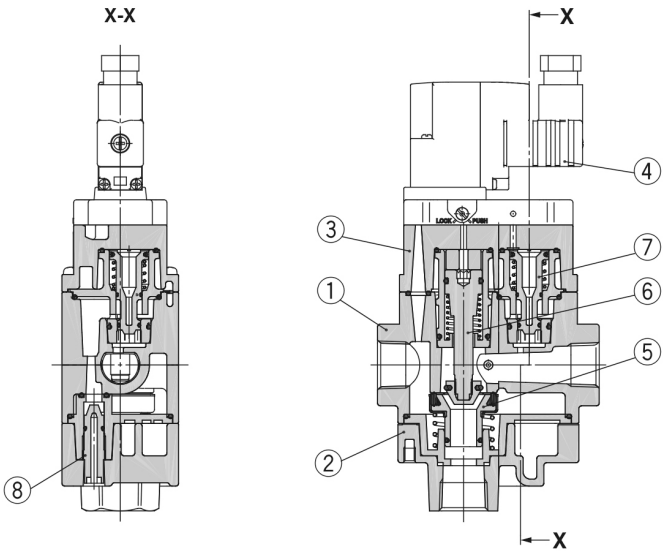


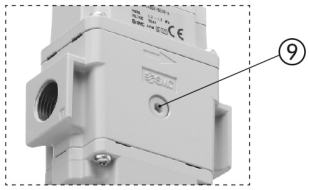


### Component Parts

| No. | Description | Material |
|---|---|---|
| 1 | **Body** | Aluminium die-cast |
| 2 | **Bottom cover** | Aluminium die-cast |
| 3 | **Top cover** | Aluminium die-cast |

### Replacement Parts

| No. | Description | Material | AV2000-A | AV3000-A | AV4000-A | AV5000-A |
|---|---|---|---|---|---|---|
| 4 | **Pilot valve assembly***1 | — | See below. | | See below. | |
| 5 | **Valve assembly** | Rubber material: HNBR | AV22P-060AS | | AV42P-060AS | AV52P-060AS |
| 6 | **Control valve assembly** | — | AV22P-110AS | | AV42P-110AS | AV52P-110AS |
| 7 | **Piston assembly** | POM, NBR | AV22P-120AS | | AV42P-120AS | AV52P-120AS |
| 8 | **Needle assembly** | POM, NBR | AV22P-150AS | AV32P-150AS | AV42P-150AS | AV52P-150AS |
| 9 | **Plug assembly** | POM, NBR | AR22P-320AS-□01 | | | |

Specifications are subject to change without prior notice and any obligation on the part of the manufacturer.



SMC CORPORATION Zuazobidea 14, 01012, Vitoria-Gasteiz, Álava +34 945184100 +34 945184126 www.smc.eu emcmarketing@smc.smces.es

## Additional information

| | |
|---|---|
| Catalogue | AV2-3-4-5000-A-B_EU.pdf |
| Declaration of conformity | newDoC_AV_TF125-81EN.pdf |
| Operation manuals | OM_AVx-A_OMZ0091EN-G.pdf |

Specifications are subject to change without prior notice and any obligation on the part of the manufacturer.



SMC CORPORATION Zuazobidea 14, 01012, Vitoria-Gasteiz, Álava +34 945184100 +34 945184126 www.smc.eu emcmarketing@smc.smces.es