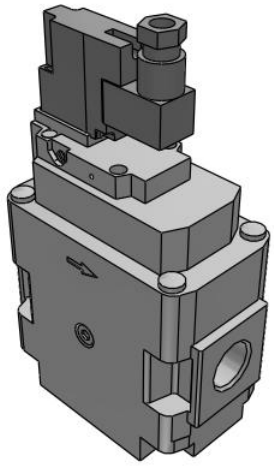

AV2000/3000/4000/5000-A, Soft Start-up Valve

AV4000-F04S-5YZ-A

Datasheet

General series information

- Power consumption: 0,35 W
- Improved flow rate characteristics: Up to 2,3 times C[dm^3/ (s·bar)]: 9,2
- Energy saving: No air flow when the main valve is switched
- Improved adjustability at low speed air supply
- Smaller profile and less work hours due to integrated silencer.

Standard specifications

Body Size	4000
Thread	F (G)
Port Size	04 (1/2)
Option	S (Silencer)
Rated Voltage	5 (24 VDC)
Electrical Entry	Y (Type Y, DIN Terminal w/Connector)
Surge Suppressor	Z (With light/surge voltage suppressor)
Manual Override	Non-locking Push Type
Flow Direction/Pressure Unit	Flow direction: left to right
Pressure medium	Air
Maximum temperature of pressure medium	50 °C
Minimum temperature of pressure medium	0 °C
Maximum ambient temperature	50 °C
Minimum ambient temperature	0 °C
Approvals	CE
Protection class with connector	Dust-protected (DIN terminal: IP65)
Weight	0.800 Kg

Specifications are subject to change without prior notice and any obligation on the part of the manufacturer.

SMC CORPORATION Zuazobidea 14, 01012, Vitoria-Gasteiz, Álava +34 945184100 +34 945184126 www.smc.eu emcmarketing@smc.smces.es

Dimensions

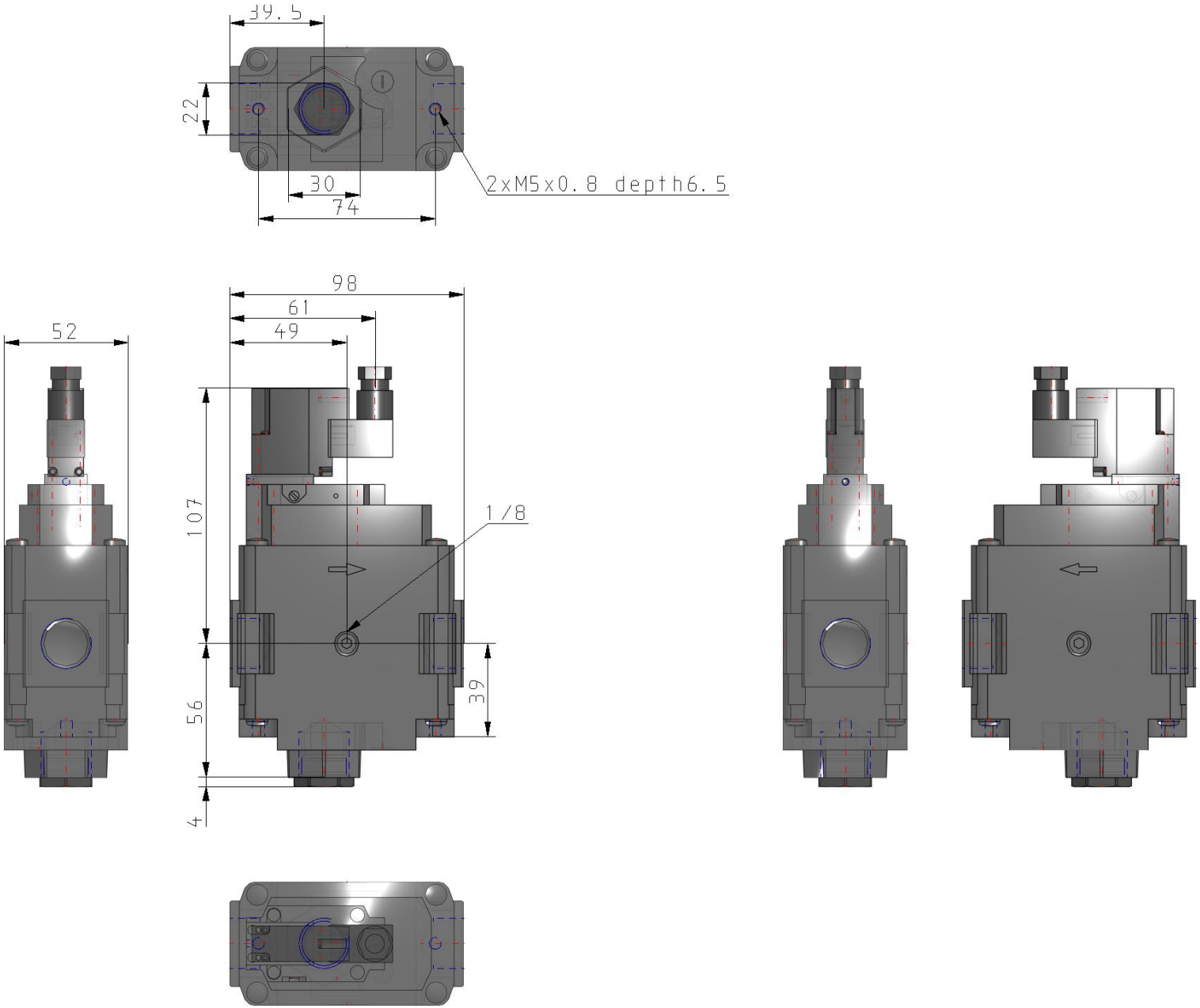

Specifications are subject to change without prior notice and any obligation on the part of the manufacturer.

SMC CORPORATION Zuazobidea 14, 01012, Vitoria-Gasteiz, Álava +34 945184100 +34 945184126 www.smc.eu emcmarketing@smc.smces.es

Additional information

Catalogue	AV2-3-4-5000-A-B_EU.pdf
Declaration of conformity	newDoC_AV_TF125-81EN.pdf
Operation manuals	OM_AVx-A_OMZ0091EN-G.pdf

Specifications are subject to change without prior notice and any obligation on the part of the manufacturer.

SMC CORPORATION Zuazobidea 14, 01012, Vitoria-Gasteiz, Álava +34 945184100 +34 945184126 www.smc.eu emcmarketing@smc.smces.es