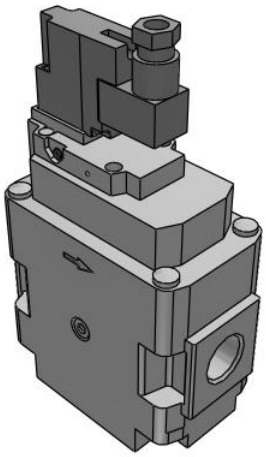

AV2000/3000/4000/5000-A, Soft Start-up Valve

AV4000-F04-5YB-A

Datasheet

General series information

- Power consumption: 0,35 W
- Improved flow rate characteristics: Up to 2,3 times C[dm^3/ (s·bar)]: 9,2
- Energy saving: No air flow when the main valve is switched
- Improved adjustability at low speed air supply
- Smaller profile and less work hours due to integrated silencer.

Standard specifications

Body Size	4000
Surge Suppressor	None
Port Size	04 (1/2)
Voltage	5 (24 VDC)
Flow Direction/Pressure Unit	Flow Direction: Left to Right
Option	None
Lead Wire	Y (Type Y, DIN Terminal w/Connector)
Manual Override	B (Push-turn Locking Slotted Type)
Thread	F (G)
Pressure medium	Air
Maximum temperature of pressure medium	50 °C
Minimum temperature of pressure medium	0 °C
Maximum operating pressure	1 MPa
Minimum operating pressure	0.2 MPa
Proof pressure	1.5 MPa
Maximum ambient temperature	50 °C
Minimum ambient temperature	0 °C
Approvals	CE

Specifications are subject to change without prior notice and any obligation on the part of the manufacturer.

SMC United Kingdom +34 945184126 sales@smc.uk

Protection class with connector	Dust-protected (DIN terminal: IP65)
Pneumatic input connection	G 1/2
Pneumatic output connection	G 1/2
Pneumatic exhaust connection	G 1/2
Flow rate	4945 l/min (ANR)
Critical pressure ratio	0.32
Sonic conductance dm3/(s·bar)	19.2
Type of electrical connector	Type Y (DIN terminal/With connector)
Manual override	R 1/4
Weight	0.800 Kg

Specifications are subject to change without prior notice and any obligation on the part of the manufacturer.

SMC United Kingdom +34 945184126 sales@smc.uk

Dimensions

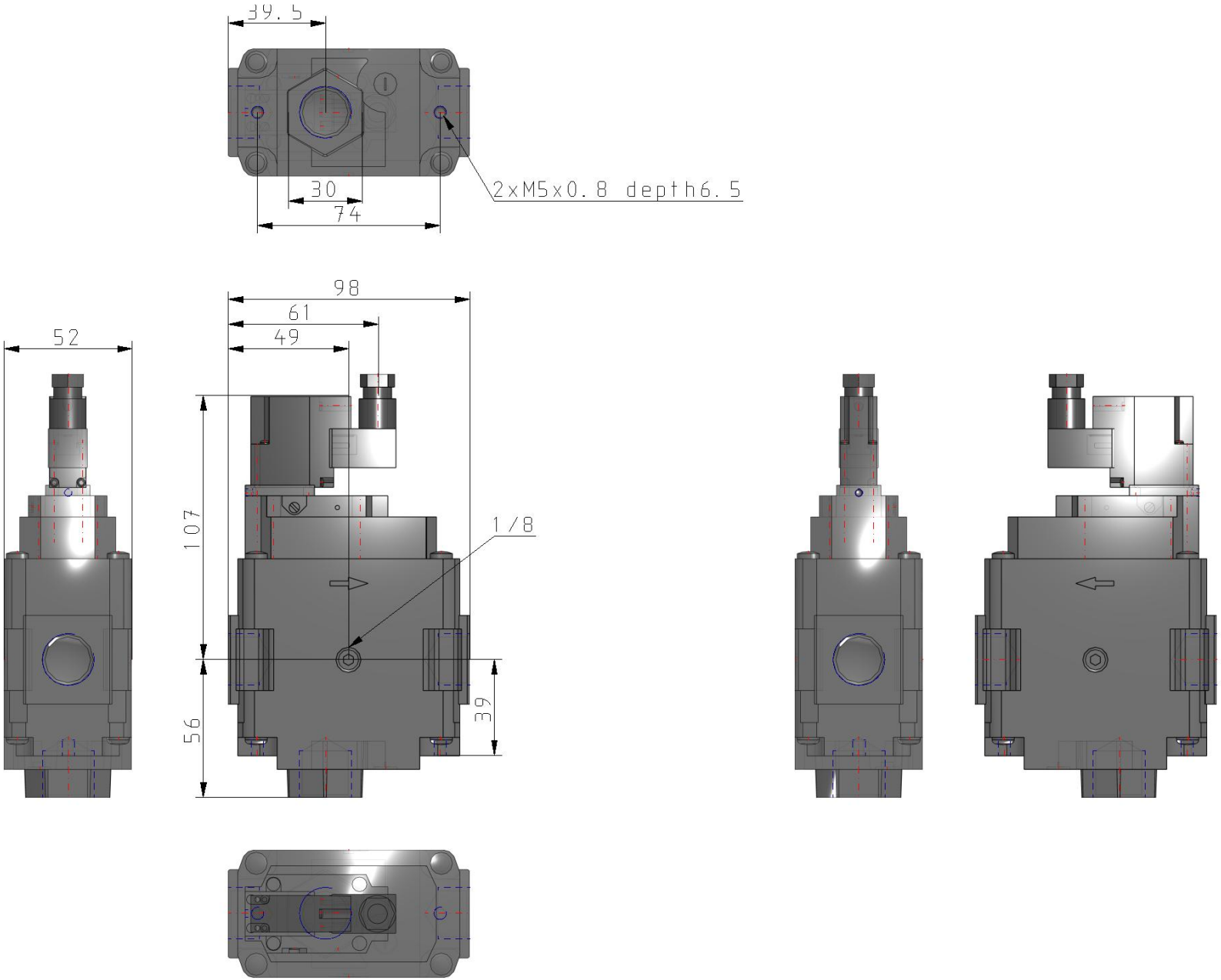

Specifications are subject to change without prior notice and any obligation on the part of the manufacturer.

Constructions

Construction

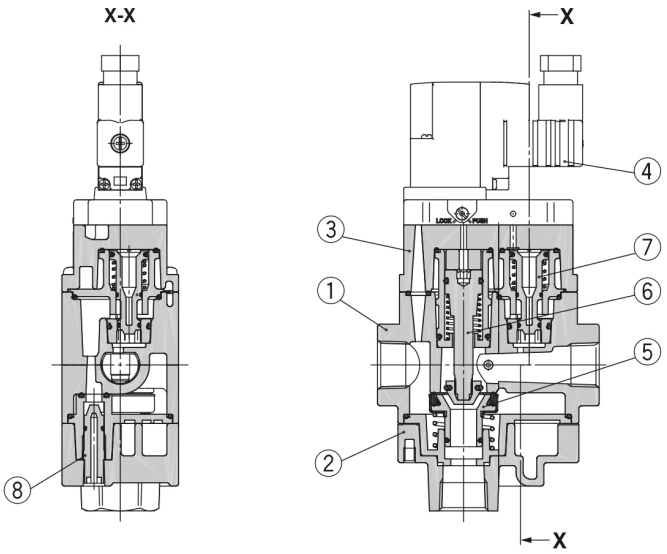

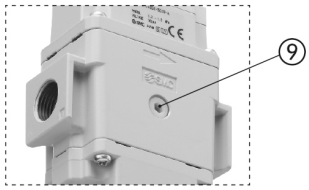

Component Parts

No.	Description	Material
1	**Body**	Aluminium die-cast
2	**Bottom cover**	Aluminium die-cast
3	**Top cover**	Aluminium die-cast

Replacement Parts

No.	Description	Material	AV2000-A	AV3000-A	AV4000-A	AV5000-A
4	**Pilot valve assembly**※1	—	See below.		See below.	
5	**Valve assembly**	Rubber material: HNBR	AV22P-060AS		AV42P-060AS	AV52P-060AS
6	**Control valve assembly**	—	AV22P-110AS		AV42P-110AS	AV52P-110AS
7	**Piston assembly**	POM, NBR	AV22P-120AS		AV42P-120AS	AV52P-120AS
8	**Needle assembly**	POM, NBR	AV22P-150AS	AV32P-150AS	AV42P-150AS	AV52P-150AS
9	**Plug assembly**	POM, NBR	AR22P-320AS-□01			

Specifications are subject to change without prior notice and any obligation on the part of the manufacturer.

SMC United Kingdom +34 945184126 sales@smc.uk

Additional information

Catalogue	AV2-3-4-5000-A-B_EU.pdf
Declaration of conformity	newDoC_AV-A_TF1V02EN.pdf newDoC_AV-A_TF122111EN.pdf
Operation manuals	OM_AVx-A_OMZ0091EN-G.pdf

Specifications are subject to change without prior notice and any obligation on the part of the manufacturer.

SMC United Kingdom +34 945184126 sales@smc.uk