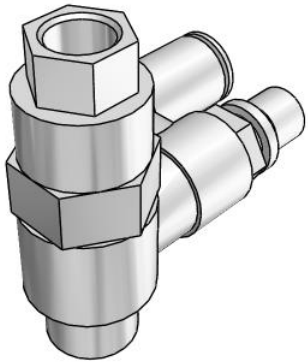

Standard – ASP
ASP430F-F02-06S

Datasheet

General series information

- Port Size: 1/8, 1/4, 3/8, 1/2
- Applicable Tubing O.D.: Ø 6 to Ø 12 mm and Ø 1/4" to Ø 1/2"
- Operating Pressure Range: 0.1 to 1 MPa.

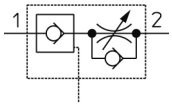

Speed controller with pilot check valve

Standard specifications

Body Size	4 (1/4 Basis)
Applicable Tubing O.D.	Ø6 mm
Port Size	F02 [Cylinder Side (R(PT)1/4) Pilot Port (G(PF)1/8)]
Lock Nut	Standard (Hexagon)
Made to Order	None
Pressure medium	Compressed Air
Maximum temperature of pressure medium	60 °C
Minimum temperature of pressure medium	-5 °C
Maximum operating pressure	1 MPa
Minimum operating pressure	0.1 MPa
Proof pressure	1.5 MPa
Maximum ambient temperature	60 °C
Minimum ambient temperature	-5 °C
Function of Flow control valve	Meter-out
Flow rate	330 l/min
Pilot check valve actuation pressure	50 % or more of operating pressure
Number of needle revolutions	10

Specifications are subject to change without prior notice and any obligation on the part of the manufacturer.

SMC United Kingdom +34 945184126 sales@smc.uk

Dimensions

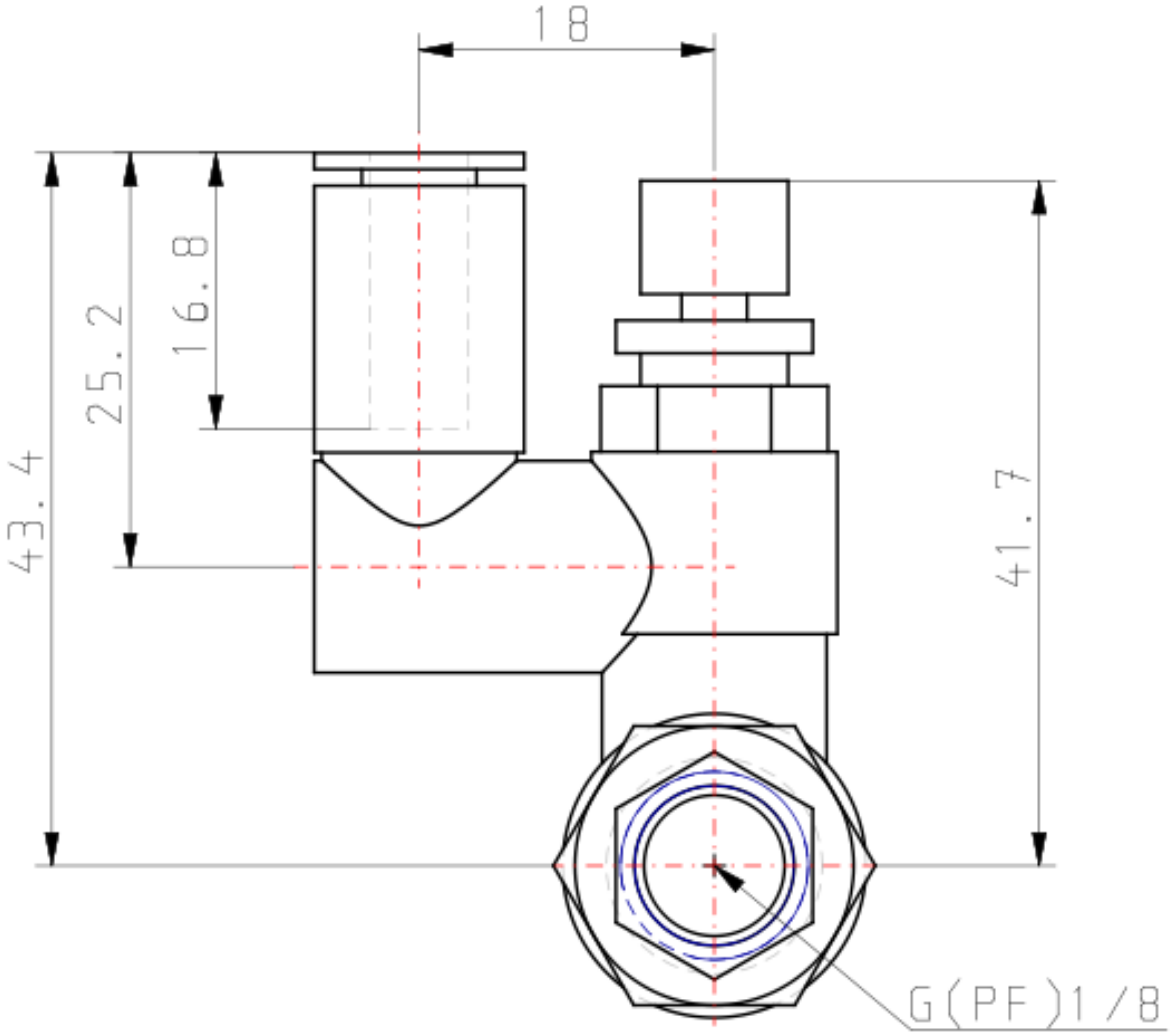

Specifications are subject to change without prior notice and any obligation on the part of the manufacturer.

SMC United Kingdom +34 945184126 sales@smc.uk

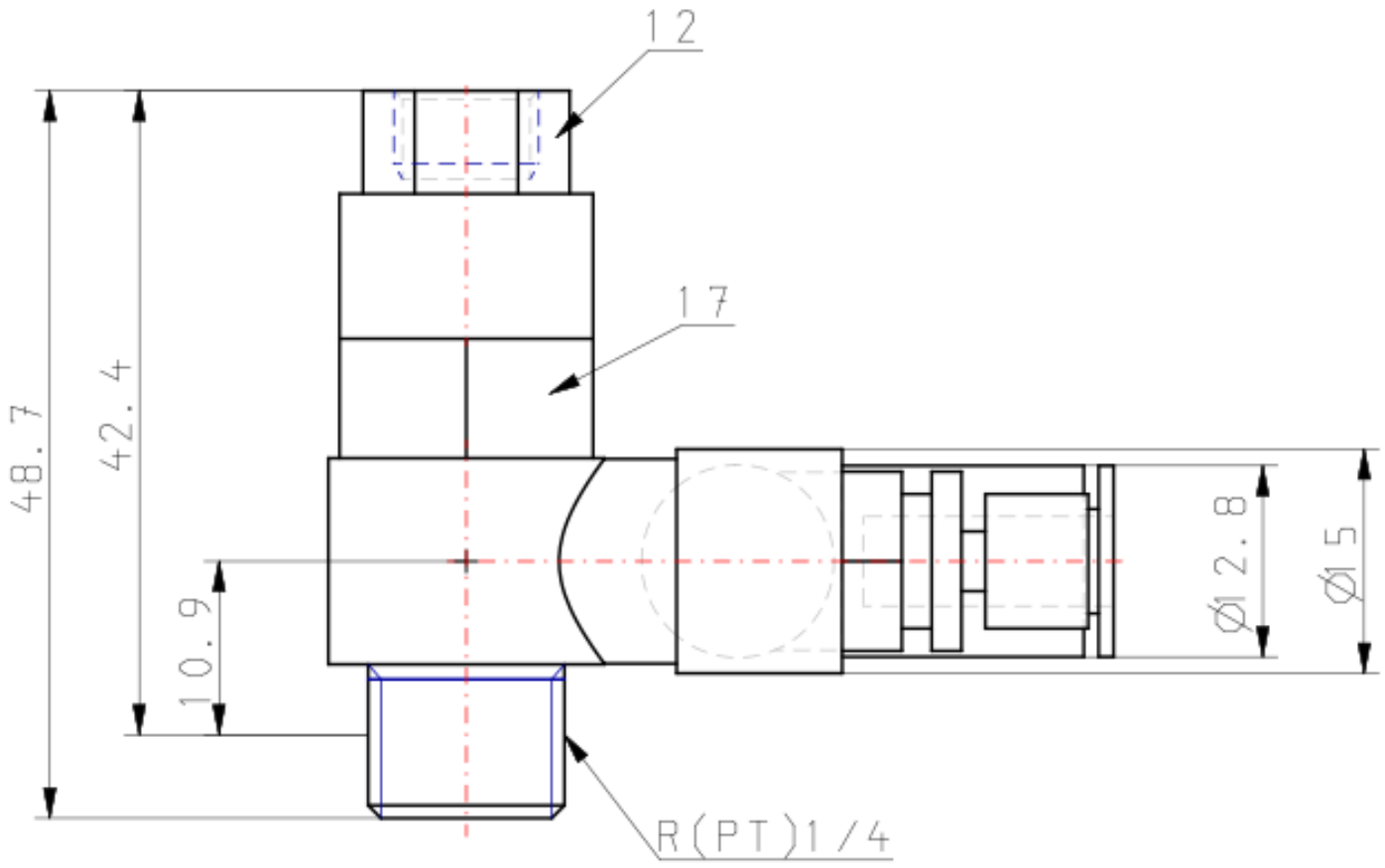

Specifications are subject to change without prior notice and any obligation on the part of the manufacturer.

SMC United Kingdom +34 945184126 sales@smc.uk

Constructions

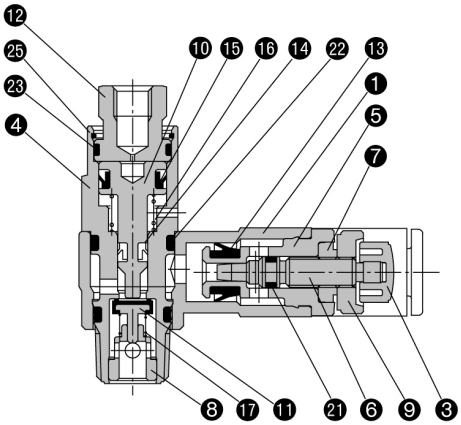

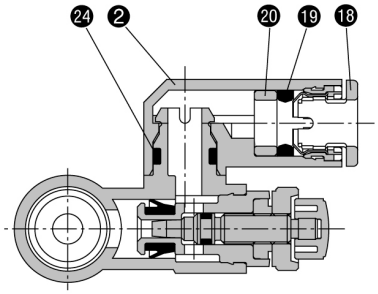

Parts list

No.	Description	Material	Note
1	**Body A**	PBT	
2	**Elbow body**	PBT	
3	**Knob**	PBT	
4	**Pilot body**	Brass	Electroless nickel plated
5	**Body B**	Brass	Electroless nickel plated
6	**Needle**	Brass	Electroless nickel plated
7	**Needle guide**	Brass	Electroless nickel plated
8	**Guide**	Brass	Electroless nickel plated
9	**Lock nut**	Brass	Electroless nickel plated
10	**Piston**	Brass	Electroless nickel plated
11	**Valve**	Stainless steel, NBR	
12	**Cover**	Brass	Black zinc chromated
13	**U seal**	NBR	

Parts list

No.	Description	Material	Note
14	**DY seal**	PBT	
15	**DY seal**	PBT	
16	**Spring**	Stainless steel	
17	**Spring**	Stainless steel	
18	**Cassette**	POM, Stainless steel Note 1)	
19	**Seal**	NBR	
20	**Spacer**	POM Note 2)	
21	**O-ring**	NBR	
22	**O-ring**	NBR	
23	**O-ring**	NBR	
24	**O-ring**	NBR	
25	**Ring**	Stainless steel	

Note 1) ø10, ø12, ø3/8", ø1/2" are POM, stainless steel and brass (electroless nickel plated).
Note 2) ø1/4", ø3/8", ø1/2" are brass (elctroless nickel plated).

Specifications are subject to change without prior notice and any obligation on the part of the manufacturer.

SMC United Kingdom +34 945184126 sales@smc.uk

Additional information

Catalogue	ASP_EU.pdf
Installation manuals	IM_ASP_TF222-097EN-A.pdf

Specifications are subject to change without prior notice and any obligation on the part of the manufacturer.

SMC United Kingdom +34 945184126 sales@smc.uk