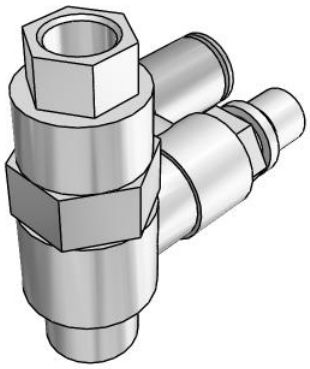

Standard – ASP
ASP430F-02-06S

Datasheet

General series information

- Port Size: 1/8, 1/4, 3/8, 1/2
- Applicable Tubing O.D.: Ø 6 to Ø 12 mm and Ø 1/4" to Ø 1/2"
- Operating Pressure Range: 0.1 to 1 MPa.

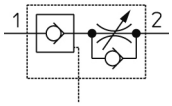

Speed controller with pilot check valve

Standard specifications

Body size	4 (1/4 Basis)
Port size	02 (Cylinder Side [R[PT] 1/4] Pilot Port [Rc[PT] 1/8])
Lock Nut	Standard (Hexagon)
Applicable tube OD	Ø6
Made to Order	None
Pressure medium	Compressed Air
Maximum temperature of pressure medium	60 °C
Minimum temperature of pressure medium	-5 °C
Maximum operating pressure	1 MPa
Minimum operating pressure	0.1 MPa
Proof pressure	1.5 MPa
Maximum ambient temperature	60 °C
Minimum ambient temperature	-5 °C
Function of Flow control valve	Meter-out
Flow rate	330 l/min
Pilot check valve actuation pressure	50 % or more of operating pressure
Number of needle revolutions	10
Weight	0.065 Kg

Specifications are subject to change without prior notice and any obligation on the part of the manufacturer.

SMC United Kingdom +34 945184126 sales@smc.uk

Dimensions

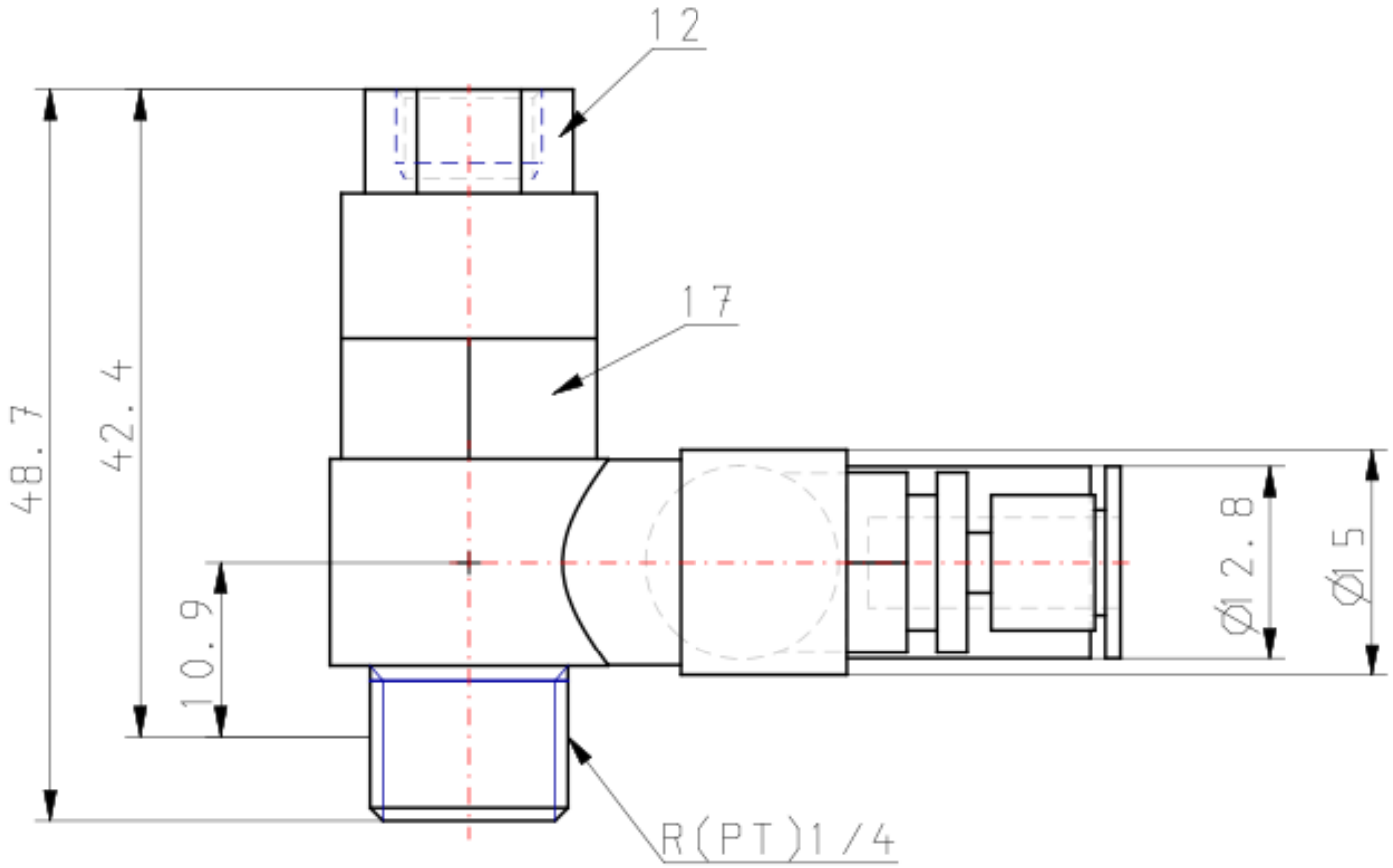

Specifications are subject to change without prior notice and any obligation on the part of the manufacturer.

SMC United Kingdom +34 945184126 sales@smc.uk

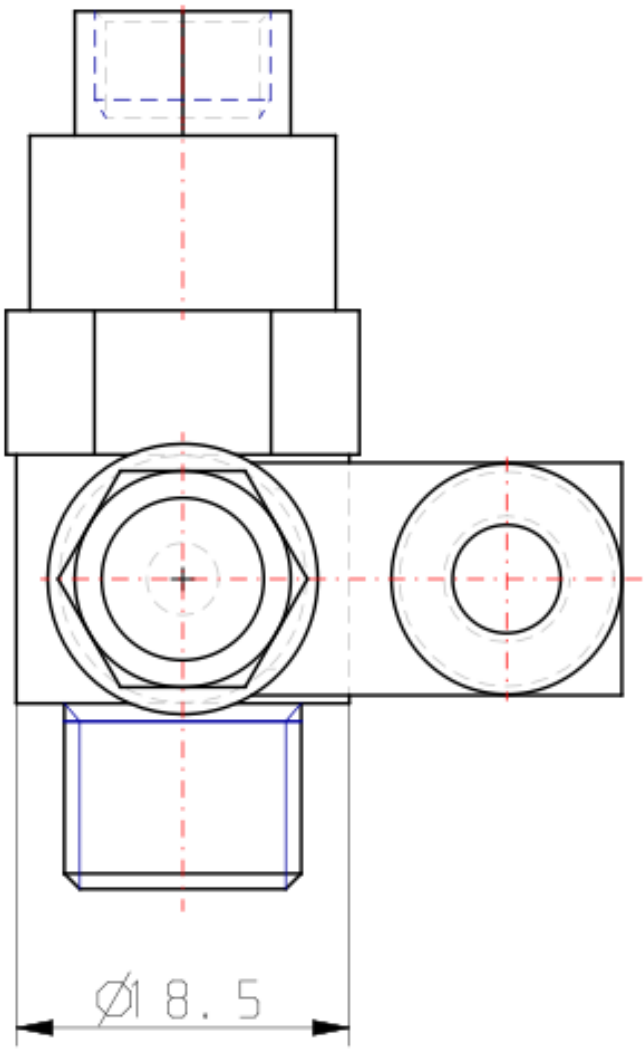

Specifications are subject to change without prior notice and any obligation on the part of the manufacturer.

SMC United Kingdom +34 945184126 sales@smc.uk

Constructions

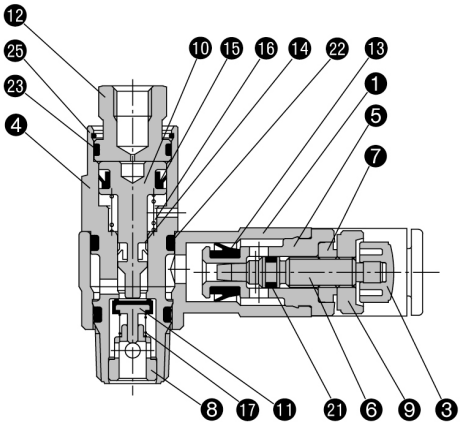

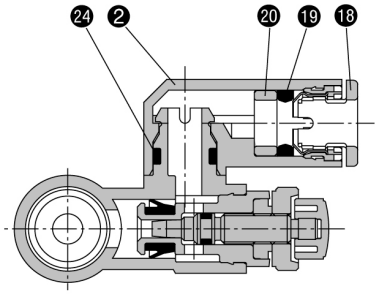

Parts list

No.	Description	Material	Note
1	**Body A**	PBT	
2	**Elbow body**	PBT	
3	**Knob**	PBT	
4	**Pilot body**	Brass	Electroless nickel plated
5	**Body B**	Brass	Electroless nickel plated
6	**Needle**	Brass	Electroless nickel plated
7	**Needle guide**	Brass	Electroless nickel plated
8	**Guide**	Brass	Electroless nickel plated
9	**Lock nut**	Brass	Electroless nickel plated
10	**Piston**	Brass	Electroless nickel plated
11	**Valve**	Stainless steel, NBR	
12	**Cover**	Brass	Black zinc chromated
13	**U seal**	NBR	

Parts list

No.	Description	Material	Note
14	**DY seal**	PBT	
15	**DY seal**	PBT	
16	**Spring**	Stainless steel	
17	**Spring**	Stainless steel	
18	**Cassette**	POM, Stainless steel Note 1)	
19	**Seal**	NBR	
20	**Spacer**	POM Note 2)	
21	**O-ring**	NBR	
22	**O-ring**	NBR	
23	**O-ring**	NBR	
24	**O-ring**	NBR	
25	**Ring**	Stainless steel	

Note 1) ø10, ø12, ø3/8", ø1/2" are POM, stainless steel and brass (electroless nickel plated).
Note 2) ø1/4", ø3/8", ø1/2" are brass (elctroless nickel plated).

Specifications are subject to change without prior notice and any obligation on the part of the manufacturer.

SMC United Kingdom +34 945184126 sales@smc.uk

Additional information

Catalogue	ASP_EU.pdf
Installation manuals	IM_ASP_TF222-097EN-A.pdf

Specifications are subject to change without prior notice and any obligation on the part of the manufacturer.

SMC United Kingdom +34 945184126 sales@smc.uk