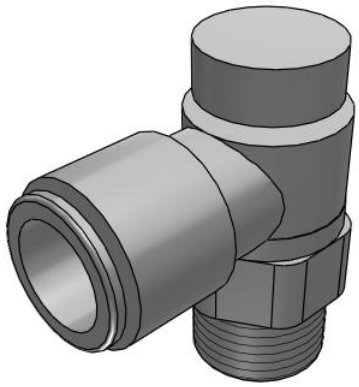

Elbow - AS*2*1FG-A
AS3201FG-03-12SA

Datasheet

General series information

- Stainless Steel 303
- Port Size: M5, 10-32 UNF, 1/8, 1/4, 3/8, 1/2
- Applicable Tubing O.D.: Ø 2 to Ø 16 mm and Ø 1/8" to Ø 1/2"
- Operating Pressure Range: 0.1 to 1 MPa.

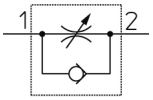

Flow control valve, adjustable, with reverse free flow

Standard specifications

Clean Series	None
Body Size	3 (3/8)
Type	2 (Elbow)
Control Type	0 (Meter-out)
Thread	R (or Metric)
Port Size	03 (3/8)
Applicable Tubing O.D.	12 (Ø12 mm)
Seal	S (w/Sealant)
Made to Order	None
Pressure medium	Air
Maximum operating pressure	1 MPa
Minimum operating pressure	0.1 MPa
Proof pressure	1.5 MPa
Maximum ambient temperature	60 °C
Minimum ambient temperature	-5 °C
Applicable tubing material	Nylon, Soft nylon, Polyurethane, FEP, PFA
Weight	0.033 Kg

Specifications are subject to change without prior notice and any obligation on the part of the manufacturer.

SMC CORPORATION Zuazobidea 14, 01012, Vitoria-Gasteiz, Álava +34 945184100 +34 945184126 www.smc.eu support.marketingeurope@smc.com

Dimensions

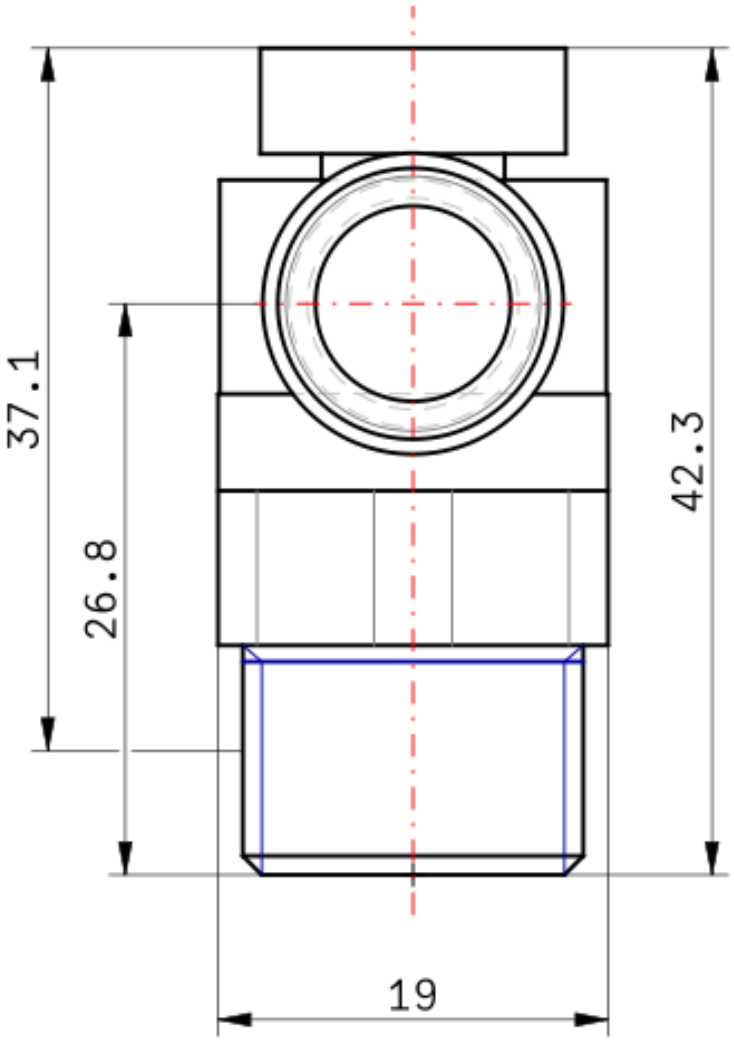

Specifications are subject to change without prior notice and any obligation on the part of the manufacturer.

SMC CORPORATION Zuazobidea 14, 01012, Vitoria-Gasteiz, Álava +34 945184100 +34 945184126 www.smc.eu support.marketingeurope@smc.com

Constructions

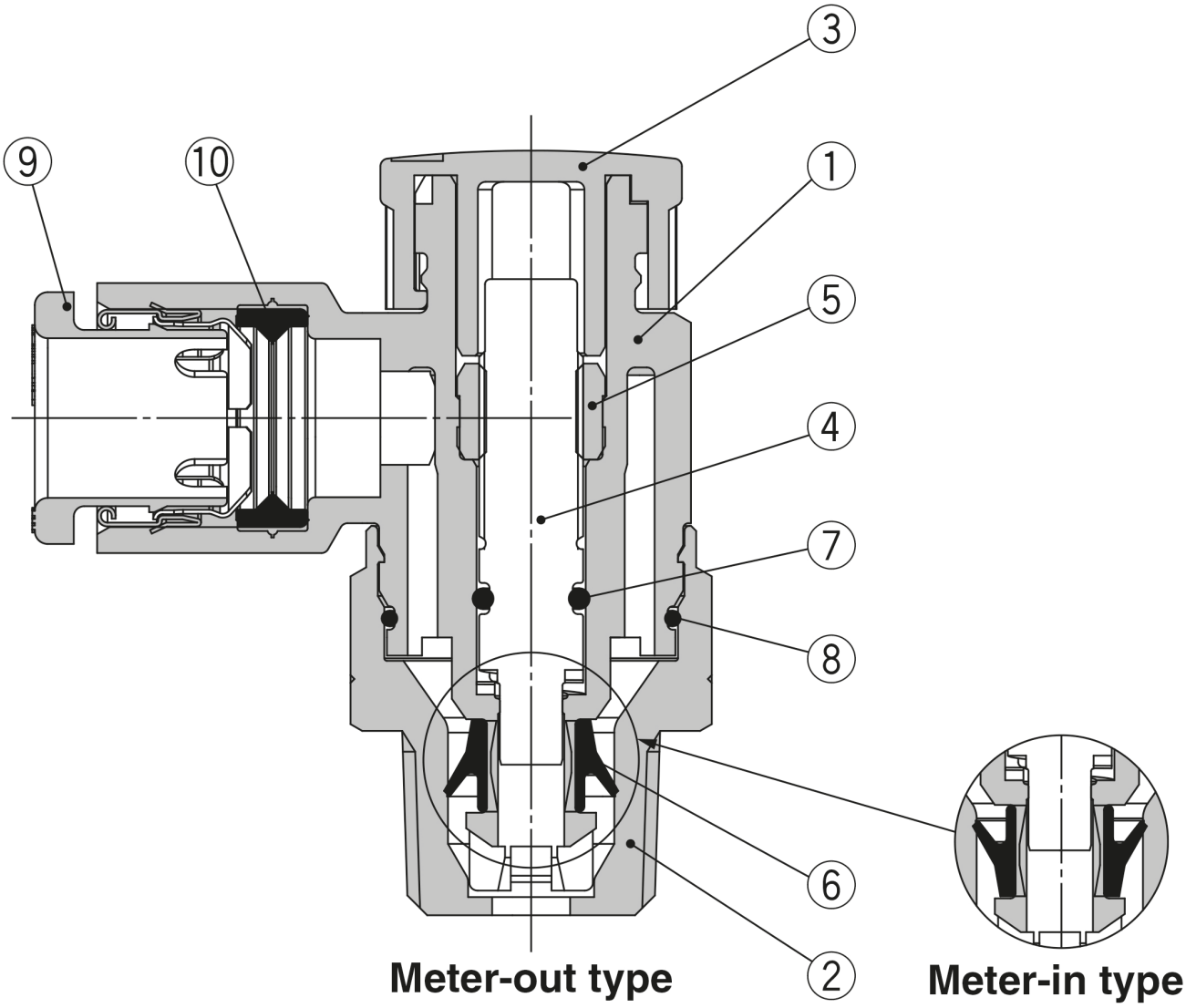

Component Parts

No.	Description	Material	Note
1	**Body A**	PBT	
2	**Body B**	Stainless steel	
3	**Knob**	POM	
4	**Needle**	PBT	
5	**Needle guide**	Stainless steel	
6	**U-seal**	HNBR	
7	**O-ring**	NBR	
8	**O-ring**	NBR	
9	**Cassette**	—	
10	**Seal**	NBR	

Specifications are subject to change without prior notice and any obligation on the part of the manufacturer.

SMC CORPORATION Zuazobidea 14, 01012, Vitoria-Gasteiz, Álava +34 945184100 +34 945184126 www.smc.eu support.marketingeurope@smc.com

Additional information

Catalogue	AS-1F_FG-A-D_EU.pdf

Specifications are subject to change without prior notice and any obligation on the part of the manufacturer.

SMC CORPORATION Zuazobidea 14, 01012, Vitoria-Gasteiz, Álava +34 945184100 +34 945184126 www.smc.eu support.marketingeurope@smc.com