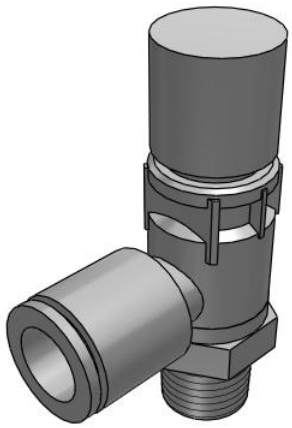

With Rapid Supply and Exhaust Function - AS-Q

AS22Q-02-10

Datasheet

General series information

- For maximum reduction of air consumption, this product should be used together with the AS-R series
- Port Size: 1/4, 3/8, 1/2
- Applicable Tubing O.D.: Ø 6 to Ø 12 mm and Ø 1/4" to Ø 1/2"
- Operating Pressure Range: 0.3 to 0.7 MPa.

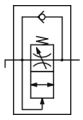

Energy Saving flow control valve, adjustable, with reverse free flow, exhaust function

Standard specifications

Body Size	2 (1/4 Standard)
Thread Type	R
Port Size	02 (1/4)
Applicable Tubing O.D.	10 (ø 10)
Pressure medium	Air
Maximum operating pressure	0.7 MPa
Minimum operating pressure	0.3 MPa
Proof pressure	1.05 MPa
Maximum ambient temperature	60 °C
Minimum ambient temperature	-5 °C
Set pressure (supply pressure at 0.5 MPa)	0.2 MPa
Applicable tubing material	Nylon, Soft nylon, Polyurethane, FEP, PFA
Weight	0.027 Kg

Specifications are subject to change without prior notice and any obligation on the part of the manufacturer.

SMC CORPORATION Zuazobidea 14, 01012, Vitoria-Gasteiz, Álava +34 945184100 +34 945184126 www.smc.eu support.marketingeurope@smc.com

Dimensions

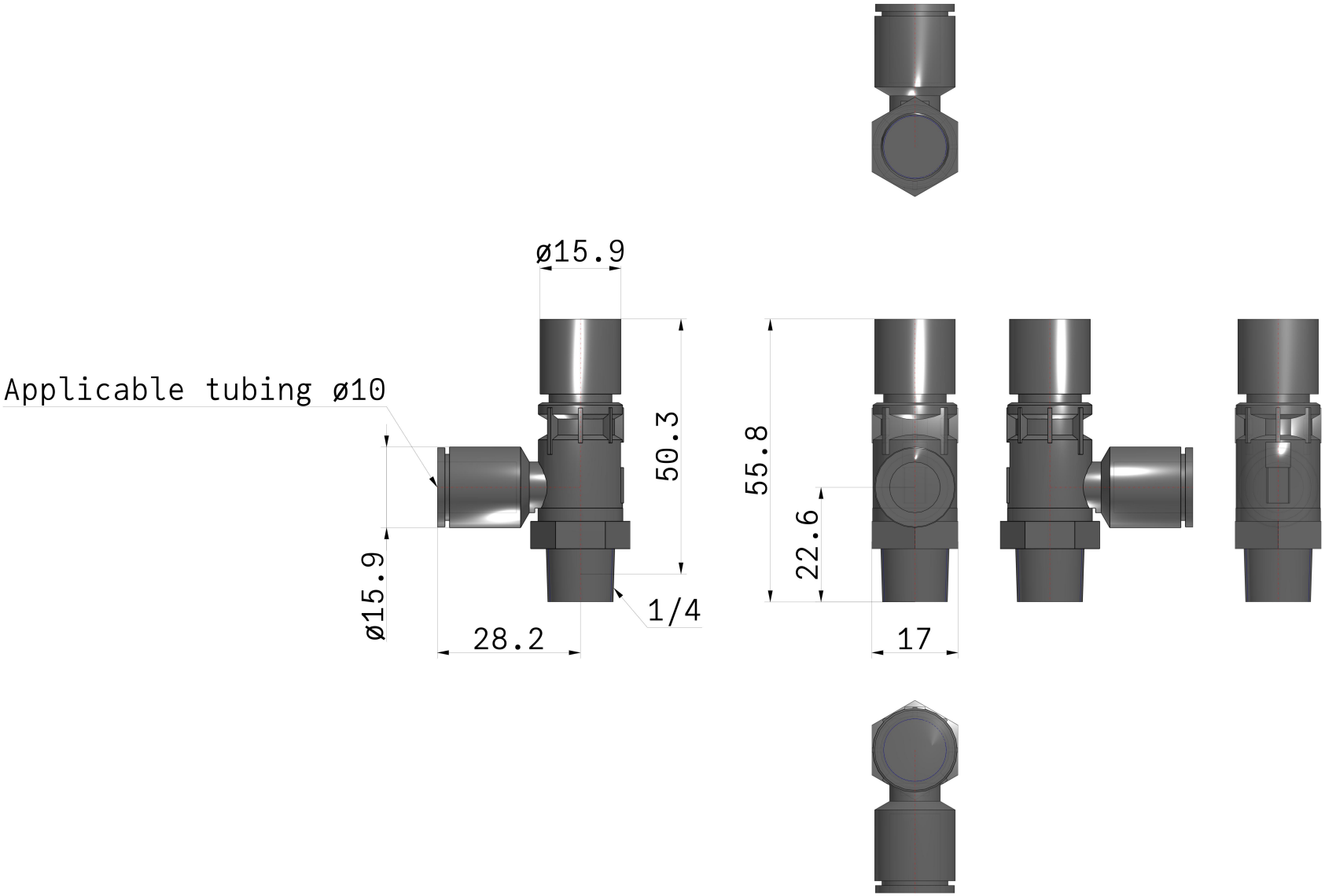

Specifications are subject to change without prior notice and any obligation on the part of the manufacturer.

SMC CORPORATION Zuazobidea 14, 01012, Vitoria-Gasteiz, Álava +34 945184100 +34 945184126 www.smc.eu support.marketingeurope@smc.com

Constructions

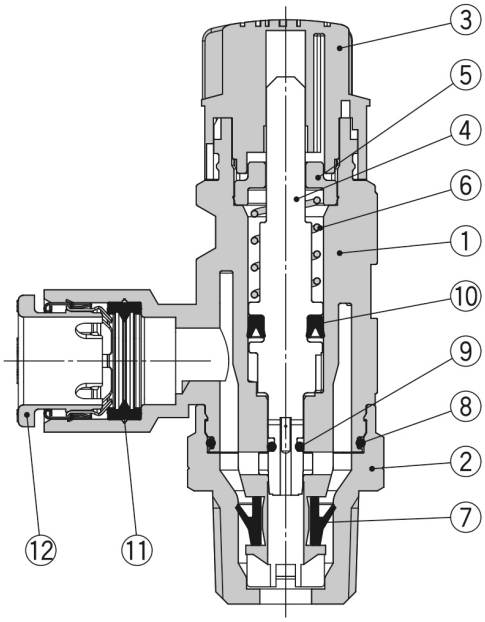

Component Parts

No.	Description	Material	Note
1	**Body A**	PBT	
2	**Body B**	Brass	Electroless nickel plating
3	**Knob**	POM	
4	**Needle**	POM	
5	**End cover**	Brass	Electroless nickel plating
6	**Spring**	Steel wire	
7	**U-seal**	HNBR	
8	**O-ring**	NBR	
9	**Needle O-ring**	NBR	
10	**Y-seal**	NBR	
11	**Seal for fitting**	NBR	
12	**Cassette**	—	

Specifications are subject to change without prior notice and any obligation on the part of the manufacturer.

SMC CORPORATION Zuazobidea 14, 01012, Vitoria-Gasteiz, Álava +34 945184100 +34 945184126 www.smc.eu support.marketingeurope@smc.com

Additional information

Catalogue	AS-R_AS-Q-C_EU.pdf

Specifications are subject to change without prior notice and any obligation on the part of the manufacturer.

SMC CORPORATION Zuazobidea 14, 01012, Vitoria-Gasteiz, Álava +34 945184100 +34 945184126 www.smc.eu support.marketingeurope@smc.com