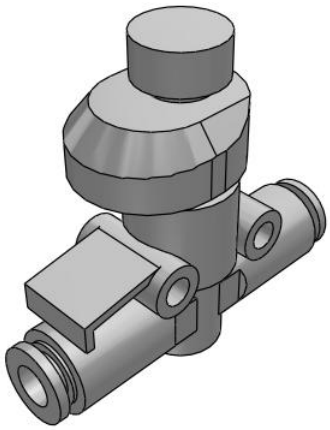

In-line - AS*2FS
AS2052FS-06

Datasheet

General series information

- Applicable Tubing O.D.: Ø 3.2 to Ø 12 mm and Ø 1/8" to Ø 1/2"
- Operating Pressure Range: 0.1 to 1 MPa.

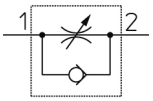

Flow control valve, adjustable, with reverse free flow

Standard specifications

Body Size	205 (1/4 Standard)
Indicator Direction	0°
Applicable Tube O.D.	06 (Ø6 mm)
Pressure medium	Air
Maximum operating pressure	1 MPa
Minimum operating pressure	0.1 MPa
Proof pressure	1.5 MPa
Maximum ambient temperature	60 °C
Minimum ambient temperature	-5 °C
Applicable tubing material	Nylon, Soft nylon, Polyurethane
Weight	0.016 Kg

Specifications are subject to change without prior notice and any obligation on the part of the manufacturer.

SMC United Kingdom +34 945184126 sales@smc.uk

Dimensions

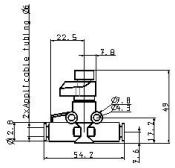

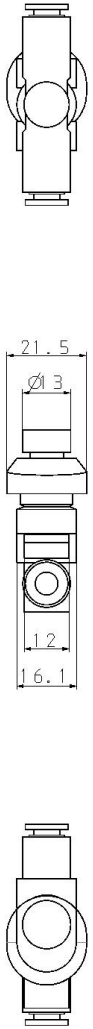

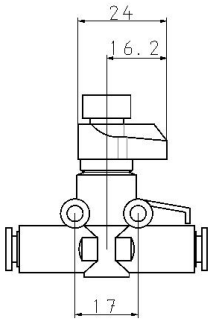

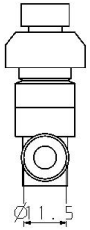

Specifications are subject to change without prior notice and any obligation on the part of the manufacturer.

Constructions

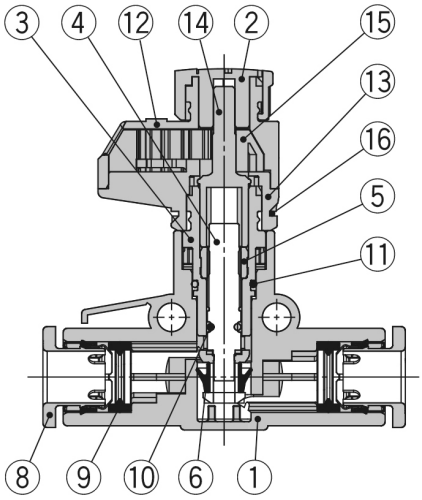

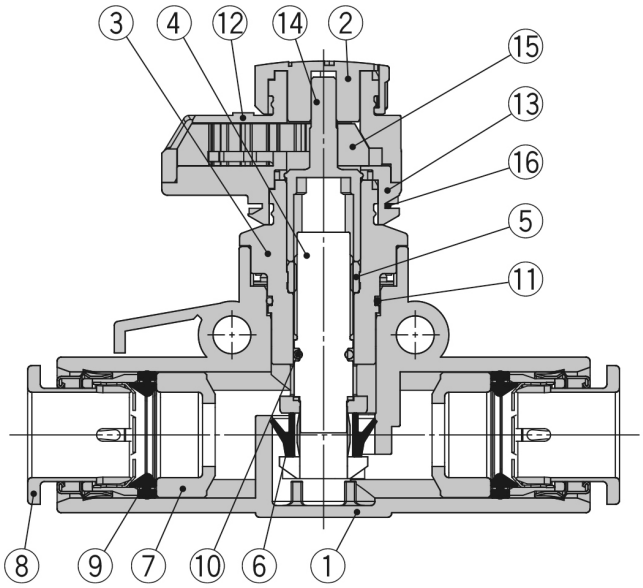

Component Parts

No.	Description	Material	Note
1	**Body A**	PBT	
2	**Knob**	POM	
3	**Body B**	PBT	
4	**Needle**	PBT	
5	**Needle guide**	Brass	Electroless nickel plating
6	**U-seal**	HNBR	
7	**Spacer**	PBT*1	
8	**Cassette**	—	
9	**Seal**	NBR	
10	**O-ring**	NBR	
11	**O-ring**	NBR	
12	**Bonnet A**	POM	
13	**Bonnet B**	POM	
14	**Gear**	PPS	
15	**Indicator gear**	POM	
16	**Clip**	Stainless steel	

*1 The AS3002FS□-11, AS4002FS□-11, AS4002FS□-13 are made of electroless nickel plated brass.

Specifications are subject to change without prior notice and any obligation on the part of the manufacturer.

SMC United Kingdom +34 945184126 sales@smc.uk

Additional information

Catalogue	AS-FS-B_in-line_EU.pdf

Specifications are subject to change without prior notice and any obligation on the part of the manufacturer.

SMC United Kingdom +34 945184126 sales@smc.uk