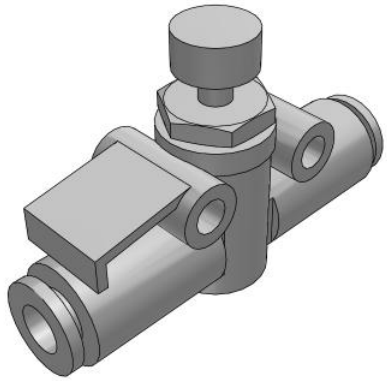

Standard (Metric Size) - AS*2F
AS2052F-06

Datasheet

General series information

- Applicable Tubing O.D.: Ø 2 to Ø 12 mm
- Operating Pressure Range: 0.1 to 1 MPa.

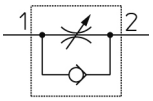

Flow control valve, adjustable, with reverse free flow

Standard specifications

Fixed Orifice	None
Body Size	205 (1/4 Standard)
Lock Nut	Standard (Hexagon)
Option	None
Applicable Tube O.D.	06 (Ø6 mm)
Pressure medium	Compressed air
Maximum temperature of pressure medium	60 °C
Minimum temperature of pressure medium	-5 °C [without condensation]
Maximum operating pressure	1.0 MPa
Minimum operating pressure	0.1 MPa
Proof pressure	1.5 MPa
Maximum ambient temperature	60 °C
Minimum ambient temperature	-5 °C
Number of pneumatic connections	2 pcs.
Pneumatic input connection	Ø 6 mm
Pneumatic output connection	Ø 6 mm
Function of Flow control valve	Throttle valve
Usable tubing material	Soft Nylon;Nylon;Polyurethane
Weight	0.019 Kg

Specifications are subject to change without prior notice and any obligation on the part of the manufacturer.

SMC United Kingdom +34 945184126 sales@smc.uk

Dimensions

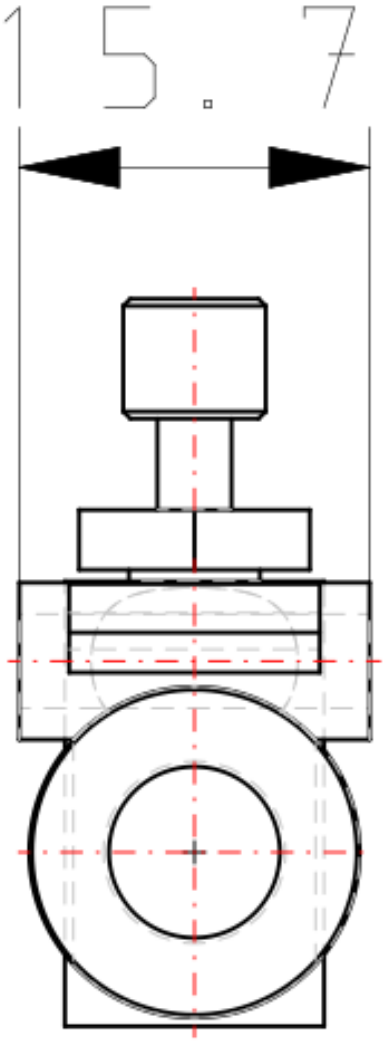

Specifications are subject to change without prior notice and any obligation on the part of the manufacturer.

SMC United Kingdom +34 945184126 sales@smc.uk

Constructions

AS1002F, AS2002F, AS2052F

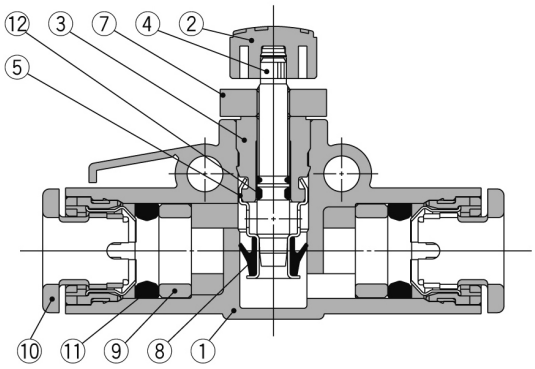

AS1002F-02, AS3002F, AS4002F

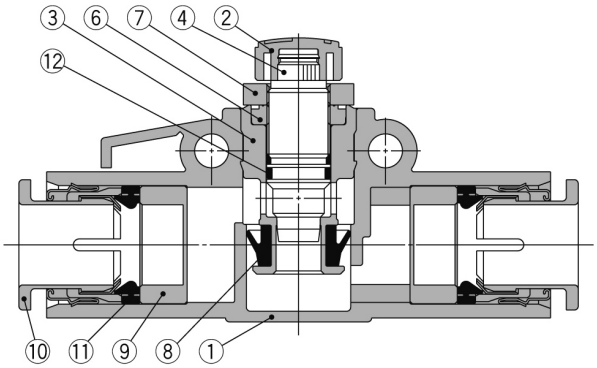

Component Parts

No.	Description	Material	Note
1	**Body A**	PBT	
2	**Handle**	PBT	
3	**Body B**	Brass	Electroless nickel plated
4	**Needle**	Brass	Electroless nickel plated
5	**Seat ring**	Brass	Electroless nickel plated
6	**Needle guide**	Brass	Electroless nickel plated

No.	Description	Material	Note
7	**Lock nut**	Steel wire	Zinc chromated
8	**U-seal**	HNBR	
9	**Spacer**	POM Note)	
10	**Cassette**	—	
11	**Seal**	NBR	
12	**O-ring**	NBR	

Note) AS2052F, AS3002F, AS4002F are made of PBT. AS3002F-11, AS4002F-11, AS4002F-13 are made of electroless nickel plated brass.

Specifications are subject to change without prior notice and any obligation on the part of the manufacturer.

SMC United Kingdom +34 945184126 sales@smc.uk

Additional information

Catalogue AS1002F-4002F-A_EU.pdf

Specifications are subject to change without prior notice and any obligation on the part of the manufacturer.

SMC United Kingdom +34 945184126 sales@smc.uk