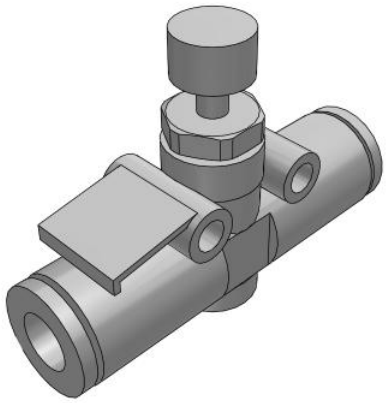

# Standard (Metric Size) - AS*2F
## AS2002F-06

Datasheet

## General series information

- Applicable Tubing O.D.: Ø 2 to Ø 12 mm
- Operating Pressure Range: 0.1 to 1 MPa.

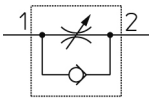


*Flow control valve, adjustable, with reverse free flow*

## Standard specifications

| | |
|---|---|
| Fixed Orifice | None |
| Body Size | 200 (1/8 Standard) |
| Lock Nut | Standard (Hexagon) |
| Option | None |
| Applicable Tube O.D. | 06 (ø6) |
| Pressure medium | Compressed air |
| Maximum temperature of pressure medium | 60 °C |
| Minimum temperature of pressure medium | -5 °C [without condensation] |
| Maximum operating pressure | 1.0 MPa |
| Minimum operating pressure | 0.1 MPa |
| Proof pressure | 1.5 MPa |
| Maximum ambient temperature | 60 °C |
| Minimum ambient temperature | -5 °C |
| Number of pneumatic connections | 2 pcs. |
| Pneumatic input connection | Ø 6 mm |
| Pneumatic output connection | Ø 6 mm |
| Function of Flow control valve | Throttle valve |
| Usable tubing material | Nylon;Polyurethane;Soft Nylon |
| Weight | 0.009 Kg |

*Specifications are subject to change without prior notice and any obligation on the part of the manufacturer.*



SMC United Kingdom +34 945184126 sales@smc.uk

## Dimensions

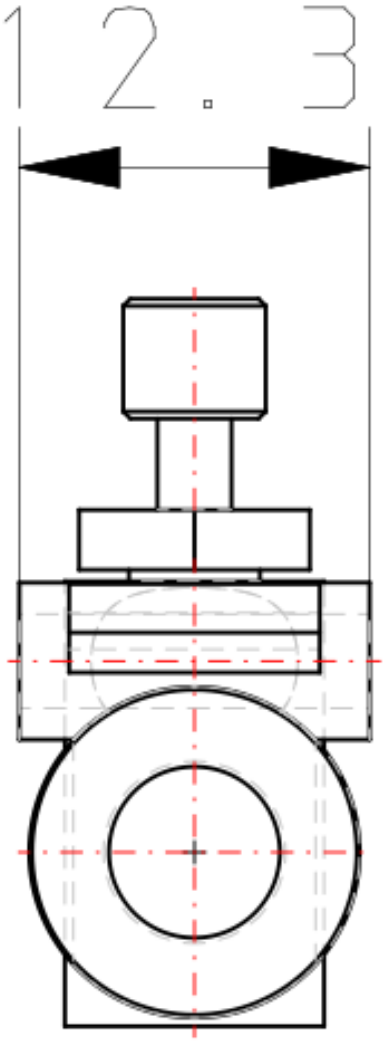


Specifications are subject to change without prior notice and any obligation on the part of the manufacturer.



SMC United Kingdom +34 945184126 sales@smc.uk

# Constructions

## AS1002F, AS2002F, AS2052F

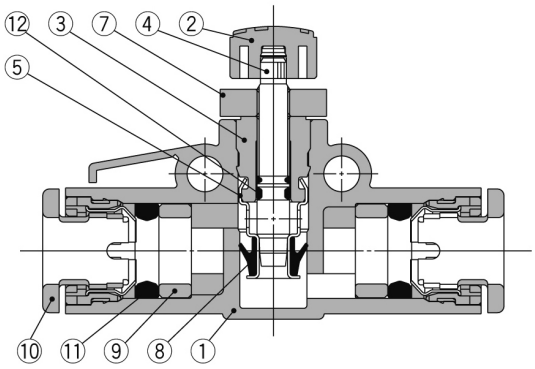


## AS1002F-02, AS3002F, AS4002F

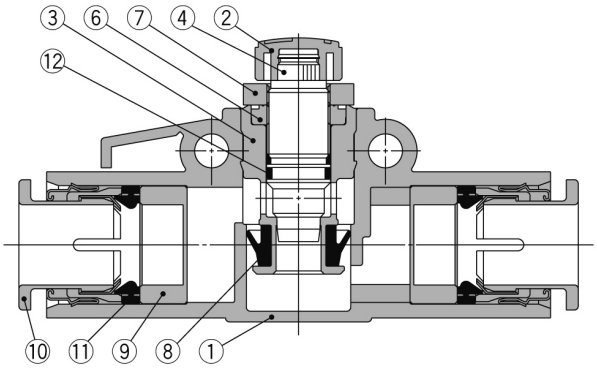


### Component Parts

| No. | Description | Material | Note |
|---|---|---|---|
| 1 | **Body A** | PBT | |
| 2 | **Handle** | PBT | |
| 3 | **Body B** | Brass | Electroless nickel plated |
| 4 | **Needle** | Brass | Electroless nickel plated |
| 5 | **Seat ring** | Brass | Electroless nickel plated |
| 6 | **Needle guide** | Brass | Electroless nickel plated |

| No. | Description | Material | Note |
|---|---|---|---|
| 7 | **Lock nut** | Steel wire | Zinc chromated |
| 8 | **U-seal** | HNBR | |
| 9 | **Spacer** | POM Note) | |
| 10 | **Cassette** | — | |
| 11 | **Seal** | NBR | |
| 12 | **O-ring** | NBR | |

Note) AS2052F, AS3002F, AS4002F are made of PBT. AS3002F-11, AS4002F-11, AS4002F-13 are made of electroless nickel plated brass.

*Specifications are subject to change without prior notice and any obligation on the part of the manufacturer.*



SMC United Kingdom +34 945184126 sales@smc.uk

## Additional information

Catalogue AS1002F-4002F-A_EU.pdf

Specifications are subject to change without prior notice and any obligation on the part of the manufacturer.



SMC United Kingdom +34 945184126 sales@smc.uk