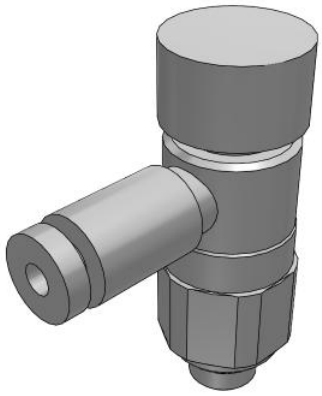

Elbow - AS*2*1F-A
AS1201F-M5-02A

Datasheet

General series information

- Port Size: M5, 10-32 UNF, 1/8, 1/4, 3/8, 1/2
- Applicable Tubing O.D.: Ø 2 to Ø 16 mm and Ø 1/8" to Ø 1/2"
- Operating Pressure Range: 0.1 to 1 MPa.

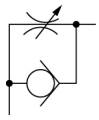

Speed controller, meter-out

Standard specifications

Type	2 (Elbow)
Across Flat [H]	Body Size 1: 9mm; Body Size 2, 3, 4 None
Body Size	1 (M5 X 0.8, 10-32UNF)
Control Type	0 (Meter-out)
Applicable Tubing O.D.	Ø2 mm
Port Size	M5 (M5 X 0.8)
Seal	None
Thread Type	R or Metric
Clean Series	None
Made to Order	None
Pressure medium	Compressed air
Maximum temperature of pressure medium	60 °C
Minimum temperature of pressure medium	-5 °C
Maximum operating pressure	1 MPa
Minimum operating pressure	0.1 MPa
Proof pressure	1.5 MPa
Maximum ambient temperature	60 °C
Minimum ambient temperature	-5 °C
Critical pressure ratio	0.2
Sonic conductance dm3/(s·bar)	0.2

Specifications are subject to change without prior notice and any obligation on the part of the manufacturer.

SMC United Kingdom +34 945184126 sales@smc.uk

Number of needle rotations	8
Weight	0.005 Kg

Specifications are subject to change without prior notice and any obligation on the part of the manufacturer.

SMC United Kingdom +34 945184126 sales@smc.uk

Dimensions

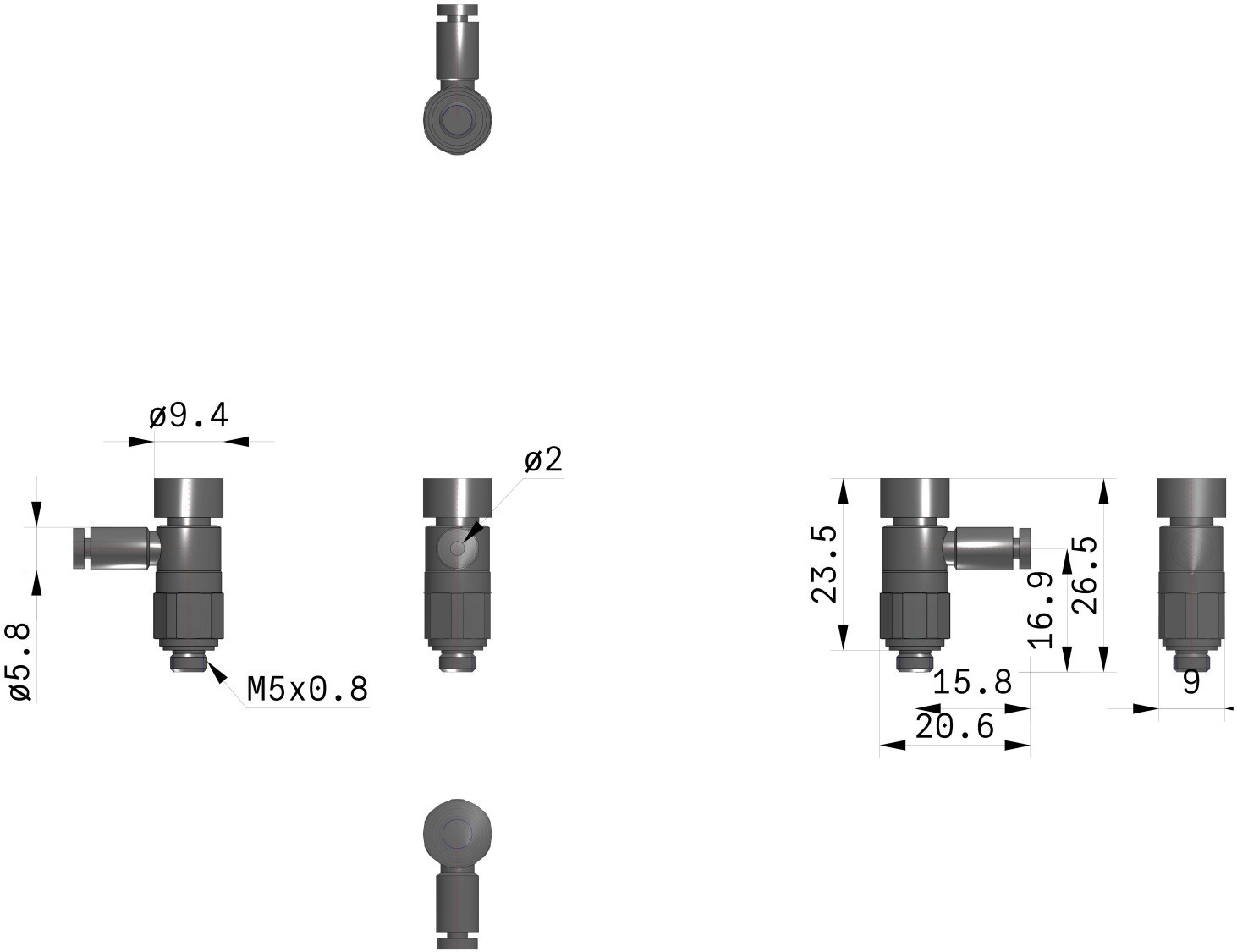

Specifications are subject to change without prior notice and any obligation on the part of the manufacturer.

Constructions

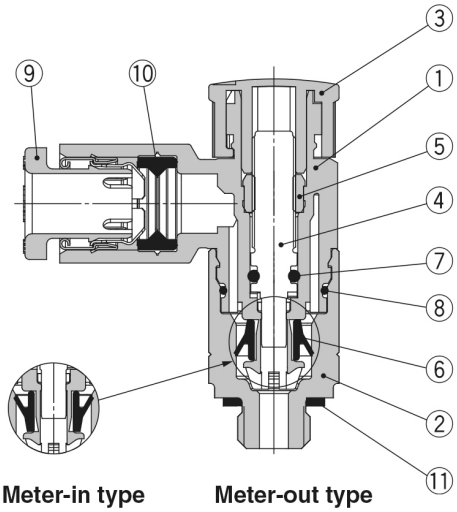

Component Parts

No.	Description	Material	Note
1	**Body A**	PBT	
2	**Body B**	Brass	Electroless nickel plating
3	**Knob**	POM	
4	**Needle**	PBT	
5	**Needle guide**	Brass	Electroless nickel plating
6	**U-seal**	HNBR	
7	**O-ring**	NBR	
8	**O-ring**	NBR	
9	**Cassette**	—	
10	**Seal**	NBR	
11	**Gasket**	NBR/Stainless steel	

Specifications are subject to change without prior notice and any obligation on the part of the manufacturer.

SMC United Kingdom +34 945184126 sales@smc.uk

Additional information

Catalogue	AS-1F_FG-A-Dd_EU.pdf

Specifications are subject to change without prior notice and any obligation on the part of the manufacturer.

SMC United Kingdom +34 945184126 sales@smc.uk