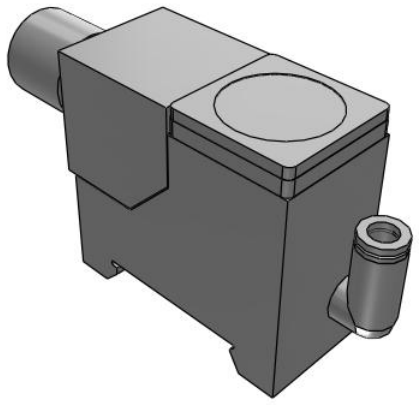

ARM11A, Regulator Block, Common Supply Type

ARM11AA1-R17-A

Datasheet

General series information

- Regulator block, common supply type
- OUT piping type: straight & elbow (metric & inch)
- OUT piping position: bottom, top
- Handle position: top, bottom, front
- Accessories: pressure gauge
- Options: 0.35MPa setting, non-relieving, oil free

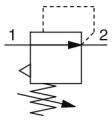

Regulator

Standard specifications

Handle Position	A (Upper)
Piping	1 (Bottom)
Fitting	17 (Ø6 Elbow)
Accessory	A (Pressure Gauge)
Option	None
Unit	Name Plate, Gauge & Pressure Switch (Fixed Display) MPa
Digital Pressure Switch Output Specifications	None
Maximum temperature of pressure medium	60 ºC
Minimum temperature of pressure medium	-5 °C (with no freezing)
Maximum operating pressure	1.0 MPa
Proof pressure	1.5 MPa
Set pressure range	0.05 - 0.7 MPa
Applicable fluid	Air
Regulator construction	Direct acting
Working principle	Piston type
Relief mechanism	Relieving type

Specifications are subject to change without prior notice and any obligation on the part of the manufacturer.

SMC CORPORATION Zuazobidea 14, 01012, Vitoria-Gasteiz, Álava +34 945184100 +34 945184126 www.smc.eu support.marketingeurope@smc.com

Dimensions

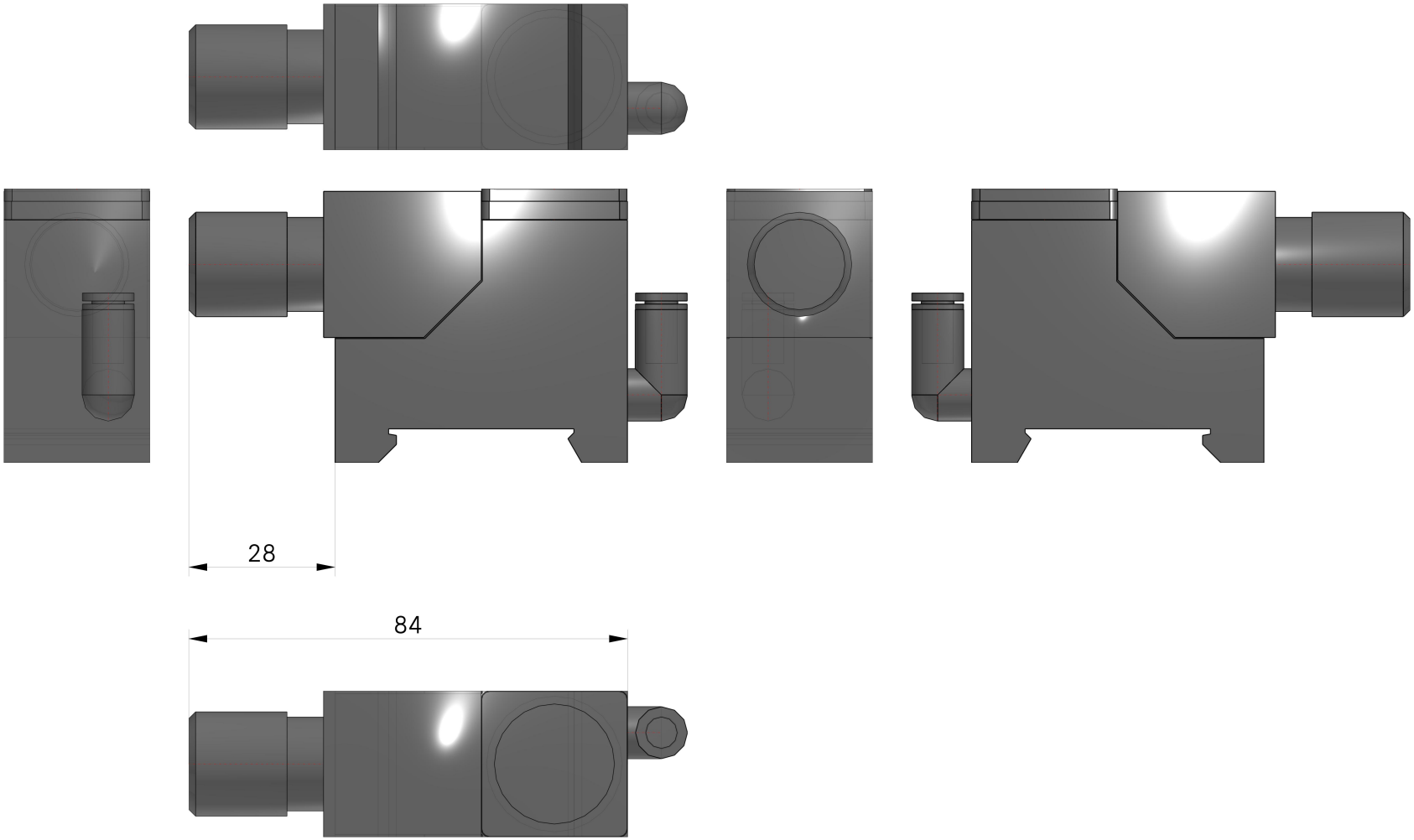

Specifications are subject to change without prior notice and any obligation on the part of the manufacturer.

SMC CORPORATION Zuazobidea 14, 01012, Vitoria-Gasteiz, Álava +34 945184100 +34 945184126 www.smc.eu support.marketingeurope@smc.com

Additional information

Catalogue	ARM10-11_EU.pdf
Operation manuals	OM_ARM10_11_OMG0039EN-B.pdf

Specifications are subject to change without prior notice and any obligation on the part of the manufacturer.

SMC CORPORATION Zuazobidea 14, 01012, Vitoria-Gasteiz, Álava +34 945184100 +34 945184126 www.smc.eu support.marketingeurope@smc.com