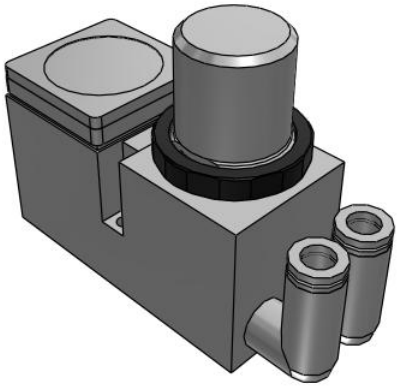

ARM10F, Single Regulator, Front Handle Type

ARM10F1-20GP-1

Datasheet

General series information

- Manifold regulator, front handle type
- IN/OUT fitting type: straight & elbow (metric & inch)
- IN/OUT piping position: bottom, top
- Accessories: bracket, pressure gauge, panel nut, cover
- Options: 0.35MPa setting, non-relieving, oil free

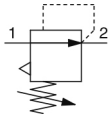

Pressure control valve, relieving pressure regulator, adjustable

Standard specifications

Piping	1 (IN: Bottom, OUT: Bottom)
Fitting	20 (IN: Elbow Ø6, OUT: Elbow Ø6)
Accessory	GP (Pressure Gauge and Panel Nut)
Option	1 (0.35 MPa)
Unit	Name Plate and Pressure Gauge: MPa
Digital Pressure Switch Output Specifications	None
Maximum operating pressure	1.0 MPa
Proof pressure	1.5 MPa
Set pressure range	0.05 - 0.35 MPa
Fluid	Air
Regulator construction	Direct acting
Working principle	Diaphragm regulator
Relief mechanism	Relief type
Backflow function	Within (unbalance type)
Ambient and fluid temperature	5 - 60 °C
Weight	0.072 Kg

Specifications are subject to change without prior notice and any obligation on the part of the manufacturer.

SMC CORPORATION Zuazobidea 14, 01012, Vitoria-Gasteiz, Álava +34 945184100 +34 945184126 www.smc.eu support.marketingeurope@smc.com

Dimensions

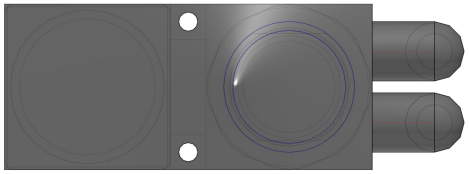

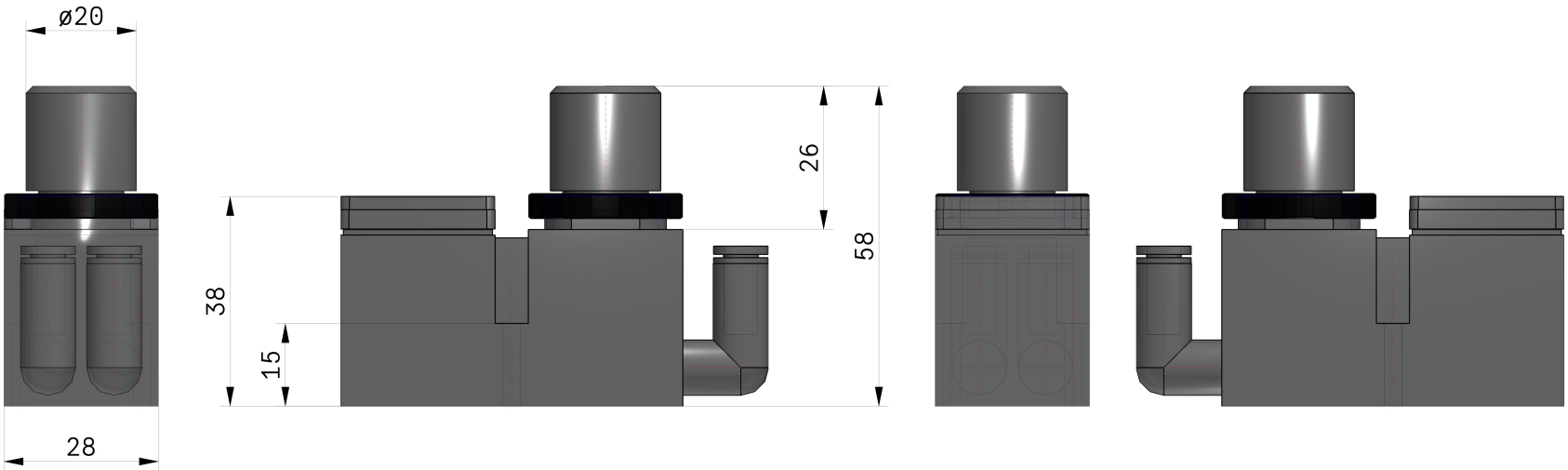

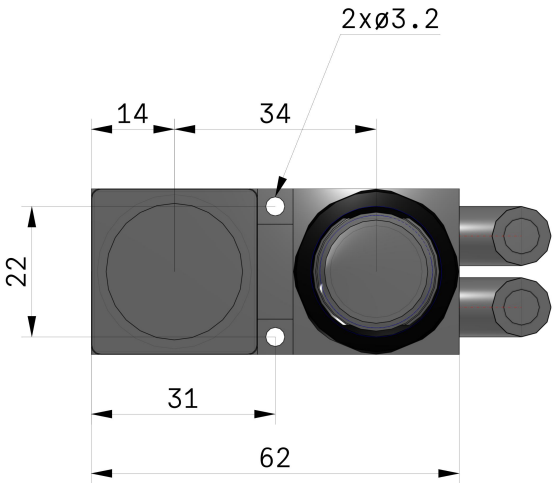

Specifications are subject to change without prior notice and any obligation on the part of the manufacturer.

SMC CORPORATION Zuazobidea 14, 01012, Vitoria-Gasteiz, Álava +34 945184100 +34 945184126 www.smc.eu support.marketingeurope@smc.com

Constructions

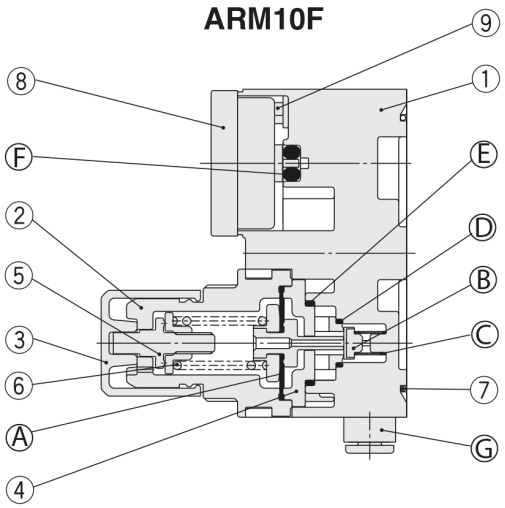

Component Parts

No.	Description	Material
1	**Body**	PBT
2	**Bonnet**	PBT
3	**Handle**	POM
4	**Valve seat**	POM
5	**Adjusting screw assembly**	Reinforced steel
6	**Adjustment spring**	Steel wire
7	**Regulator clip**	Stainless steel
8	**Blanking plate assembly**	—
9	**Square nut**	Steel

No.	Description	Material	Note
A	**Diaphragm assembly**	Weatherproof NBR, POM	Relieving type
			Non-relieving type
B	**Valve**	HNBR, Aluminum alloy	
C	**Valve spring**	Stainless steel	
D	**O-ring**	NBR	Standard model
		HNBR	Oil-free specification
E	**O-ring**	NBR	Standard model
		HNBR	Oil-free specification
F	**O-ring**	NBR	Standard model
		HNBR	Oil-free specification
		NBR	Standard model for digital pressure switch
		HNBR	Oil-free spec. for digital pressure switch
G	**Fitting assembly**	—	

Specifications are subject to change without prior notice and any obligation on the part of the manufacturer.

SMC CORPORATION Zuazobidea 14, 01012, Vitoria-Gasteiz, Álava +34 945184100 +34 945184126 www.smc.eu support.marketingeurope@smc.com

Additional information

Catalogue	ARM10-11_EU.pdf
Operation manuals	OM_ARM10_11_OMG0039EN-B.pdf

Specifications are subject to change without prior notice and any obligation on the part of the manufacturer.

SMC CORPORATION Zuazobidea 14, 01012, Vitoria-Gasteiz, Álava +34 945184100 +34 945184126 www.smc.eu support.marketingeurope@smc.com