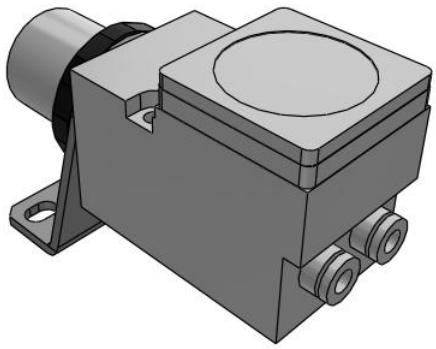

# ARM10, Small Manifold Regulator, Single Unit

## ARM10-06BG

Datasheet

## General series information

- Small manifold regulator, single unit
- IN/OUT fittings: straight & elbow (metric & inch)
- Proof pressure: 1.5MPa
- Ambient temperature: 5~60°C
- Accessories: bracket, pressure gauge, panel nut
- Options: 0.35MPa setting, non-relieving, oil free

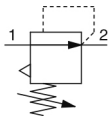


*Pressure control valve, relieving pressure regulator, adjustable*

## Standard specifications

| | |
|---|---|
| Digital Pressure Switch Output Specifications | None |
| Accessory | BG (B + G) |
| Fitting | 06 (IN: Straight Ø4, OUT: Straight Ø4) |
| Option | None |
| Unit | Name Plate, Pressure Gauge MPa |
| Maximum operating pressure | 1.0 MPa |
| Proof pressure | 1.5 MPa |
| Set pressure range | 0.05 - 0.7 MPa |
| Fluid | Air |
| Regulator construction | Direct acting |
| Working principle | Diaphragm regulator |
| Relief mechanism | Relief type |
| Backflow function | Within (unbalance type) |
| Ambient and fluid temperature | 5 - 60 °C |
| Weight | 0.060 Kg |

*Specifications are subject to change without prior notice and any obligation on the part of the manufacturer.*



SMC United Kingdom +34 945184126 sales@smc.uk

# Dimensions

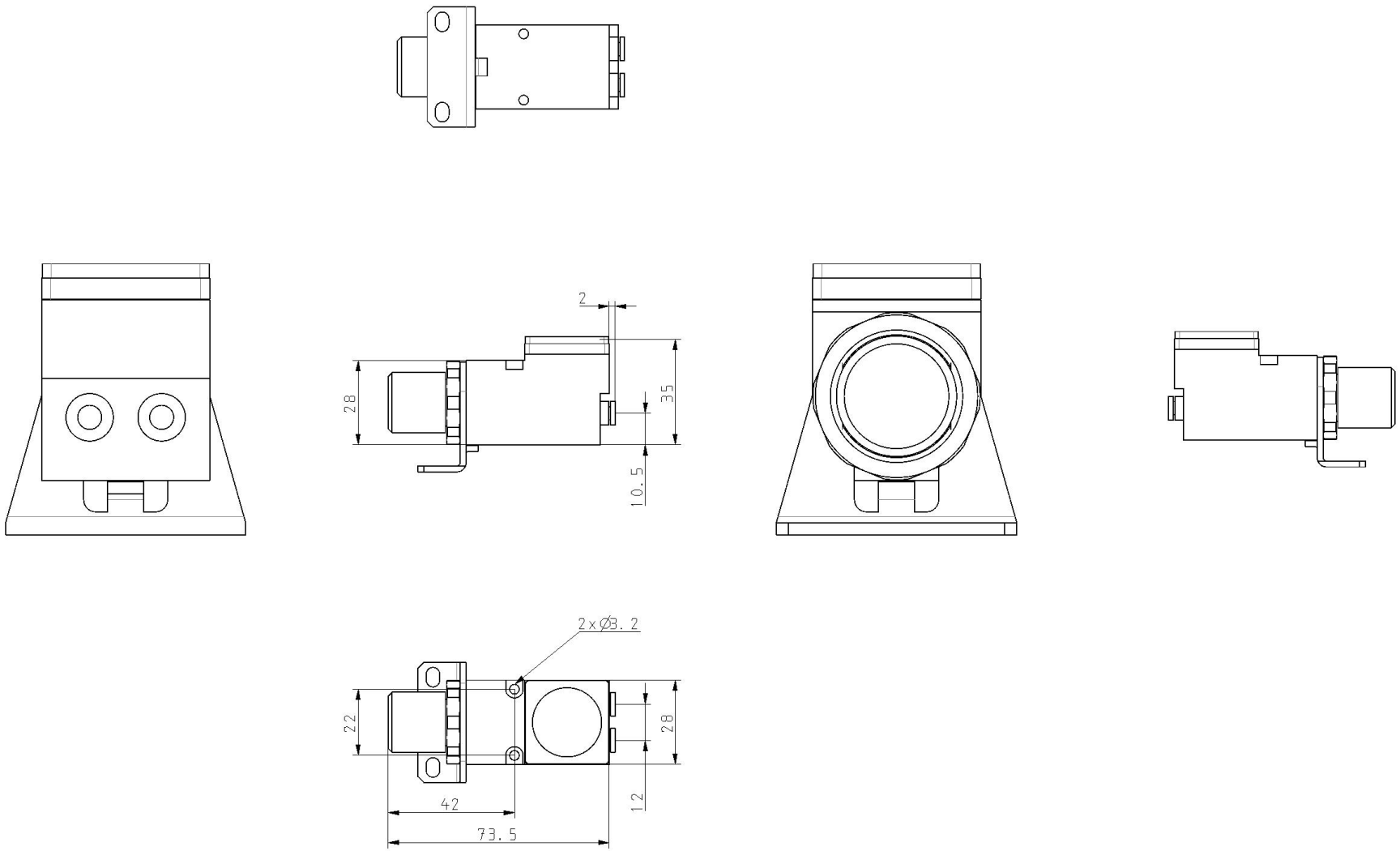


Specifications are subject to change without prior notice and any obligation on the part of the manufacturer.

# Constructions

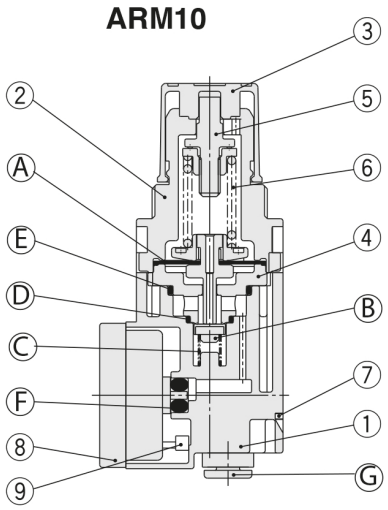


## Component Parts

| No. | Description | Material |
|---|---|---|
| 1 | **Body** | PBT |
| 2 | **Bonnet** | PBT |
| 3 | **Handle** | POM |
| 4 | **Valve seat** | POM |
| 5 | **Adjusting screw assembly** | Reinforced steel |
| 6 | **Adjustment spring** | Steel wire |
| 7 | **Regulator clip** | Stainless steel |
| 8 | **Blanking plate assembly** | — |
| 9 | **Square nut** | Steel |

| No. | Description | Material | Note |
|---|---|---|---|
| A | **Diaphragm assembly** | Weatherproof NBR, POM | Relieving type |
| | | | Non-relieving type |
| B | **Valve** | HNBR, Aluminum alloy | |
| C | **Valve spring** | Stainless steel | |
| D | **O-ring** | NBR | Standard model |
| | | HNBR | Oil-free specification |
| E | **O-ring** | NBR | Standard model |
| | | HNBR | Oil-free specification |
| F | **O-ring** | NBR | Standard model |
| | | HNBR | Oil-free specification |
| | | NBR | Standard model for digital pressure switch |
| | | HNBR | Oil-free spec. for digital pressure switch |
| G | **Fitting assembly** | — | |

*Specifications are subject to change without prior notice and any obligation on the part of the manufacturer.*



SMC United Kingdom +34 945184126 sales@smc.uk

## Additional information

| | |
|---|---|
| Catalogue | ARM10-11_EU.pdf |
| Operation manuals | arm10_11_op_man_ar_-omg0039-a.pdf |

Specifications are subject to change without prior notice and any obligation on the part of the manufacturer.



SMC United Kingdom +34 945184126 sales@smc.uk