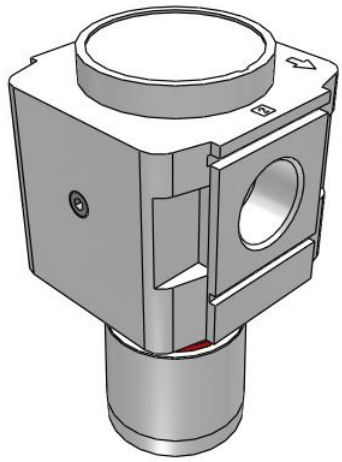

AR20-D to AR60-D, Regulator
AR50-F10-D

Datasheet

General series information

- ISO 8573-1:2010 compliant
- Up to 0.85 MPa set pressure
- Maximum flow rate up to 20000 l/min (ANR, 0.7MPa).

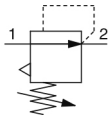

Regulator

Standard specifications

Body Size	50
Backflow Function	None
Thread	F (G)
Port Size	10 (1)
Options	w/o Mounting Option
Set Pressure	0.05 to 0.85 MPa Setting
Exhaust Mechanism	Relieving
Flow Direction	Left to Right
Knob	Downward
Pressure Units	Standard (Name Plate, Caution Plate for Bowl, and Pressure Gauge: MPa)
Construction	Relieving type
Pressure medium	Air
Maximum temperature of pressure medium	60 °C
Minimum temperature of pressure medium	-5 °C (with no freezing)
Maximum operating pressure	1.0 MPa
Proof pressure	1.5 MPa
Maximum ambient temperature	60 °C
Minimum ambient temperature	-5 °C (with no freezing)
Weight	1.117 Kg

Specifications are subject to change without prior notice and any obligation on the part of the manufacturer.

SMC CORPORATION Zuazobidea 14, 01012, Vitoria-Gasteiz, Álava +34 945184100 +34 945184126 www.smc.eu support.marketingeurope@smc.com

Dimensions

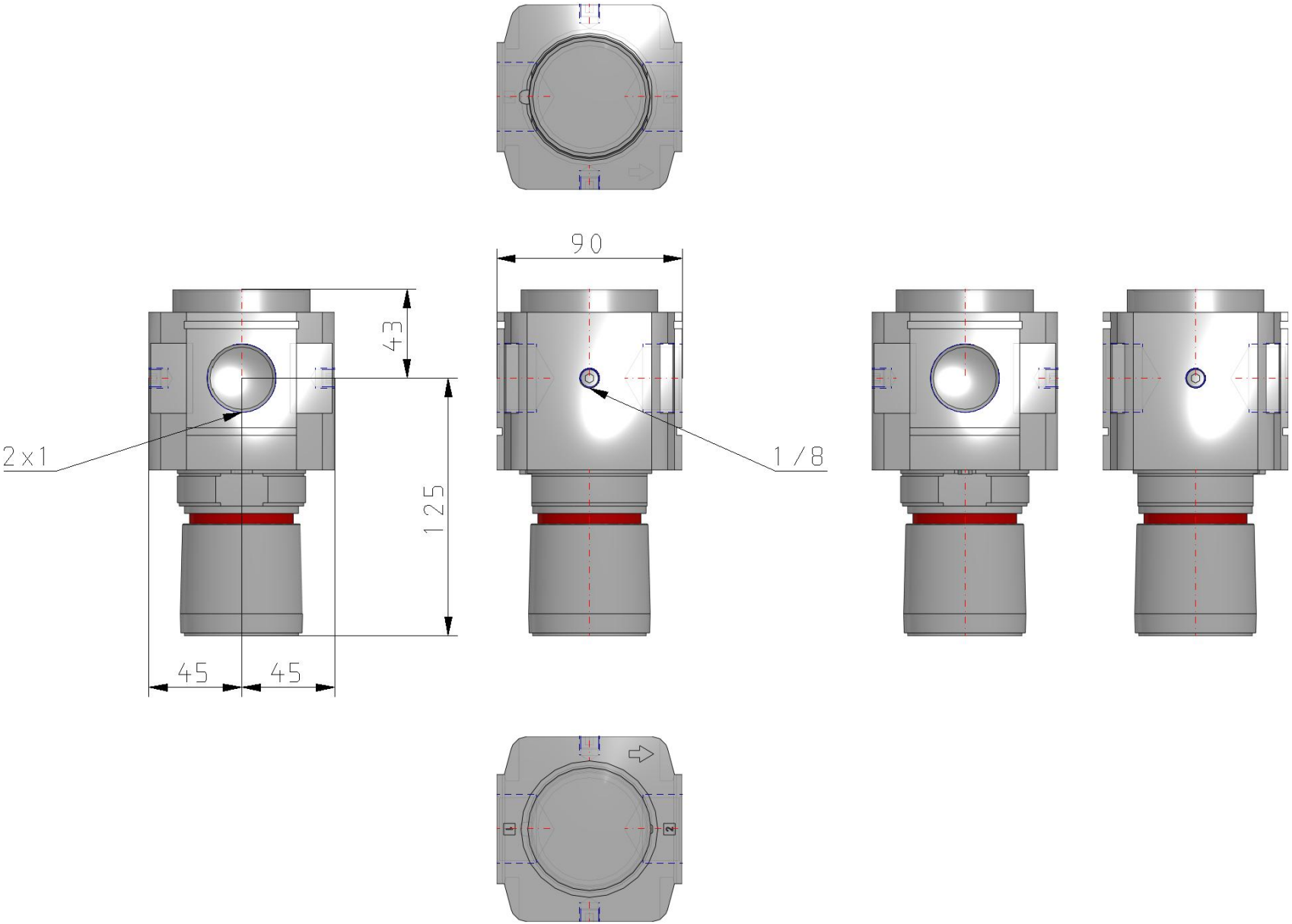

Specifications are subject to change without prior notice and any obligation on the part of the manufacturer.

SMC CORPORATION Zuazobidea 14, 01012, Vitoria-Gasteiz, Álava +34 945184100 +34 945184126 www.smc.eu support.marketingeurope@smc.com

Additional information

Catalogue	AC-D-D_EU.pdf
Installation manuals	IM_ARx-D_TF2Z352EN.pdf
Operation manuals	OM_AR-D_OMX0055EN-B.pdf

Specifications are subject to change without prior notice and any obligation on the part of the manufacturer.

SMC CORPORATION Zuazobidea 14, 01012, Vitoria-Gasteiz, Álava +34 945184100 +34 945184126 www.smc.eu support.marketingeurope@smc.com