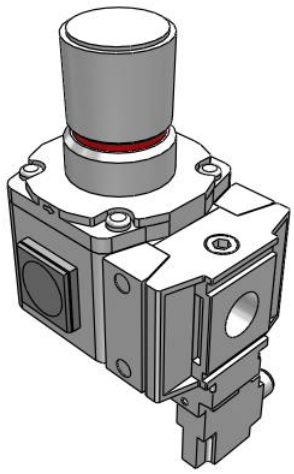

Standby Regulator – AR20S~50S
AR40S-F04E-Y-15V

Datasheet

General series information

- Manual pressure setting and switching during equipment shutdown
- Normally open specification
- With backflow function.

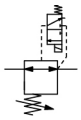

Standby regulator

Standard specifications

Body Size	40
Thread Type	F (G)
Port Size	04 (1/2)
Pressure Gauge	E (Square embedded type pressure gauge [with limit indicator])
Knob	Y (Upward)
Unit	Name Plate and Pressure Gauge: MPa
Rated Voltage	5 (24 VDC)
Electrical Entry	V (M12 Connector, 5-Pin Type)
Manual Override	Non-locking Push Type
Pressure medium	Air
Maximum temperature of pressure medium	50 °C
Minimum temperature of pressure medium	0 °C
Maximum operating pressure	0.7 MPa
Maximum ambient temperature	50 °C
Minimum ambient temperature	0 °C
General power supply	24 VDC
Conform to the European RoHS Directive	Conform
Approvals	CE, UKCA
Enclosure	IP65

Specifications are subject to change without prior notice and any obligation on the part of the manufacturer.

SMC CORPORATION Zuazobidea 14, 01012, Vitoria-Gasteiz, Álava +34 945184100 +34 945184126 www.smc.eu support.marketingeurope@smc.com

Set pressure range	0.2 - 0.4 MPa
Power Consumption	0.4 W
Weight	0.690 Kg

Specifications are subject to change without prior notice and any obligation on the part of the manufacturer.

SMC CORPORATION Zuazobidea 14, 01012, Vitoria-Gasteiz, Álava +34 945184100 +34 945184126 www.smc.eu support.marketingeurope@smc.com

Dimensions

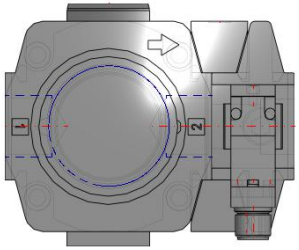

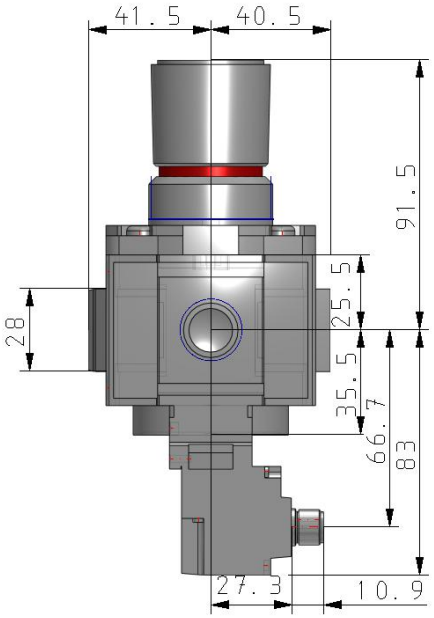

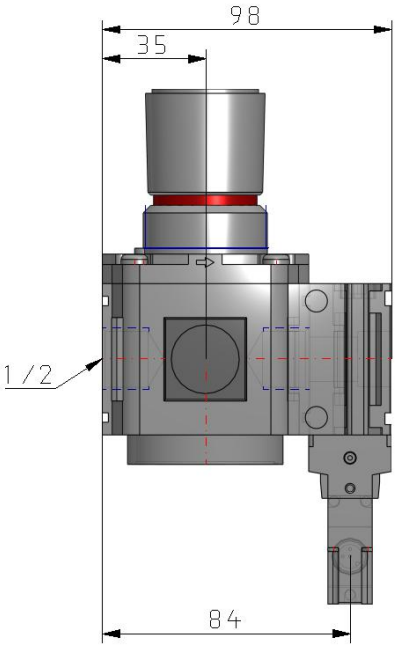

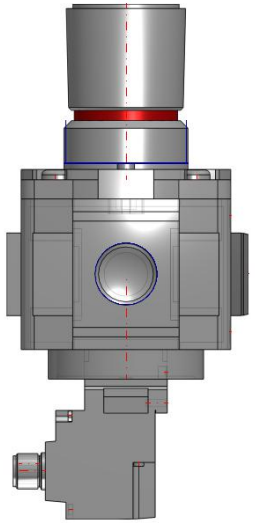

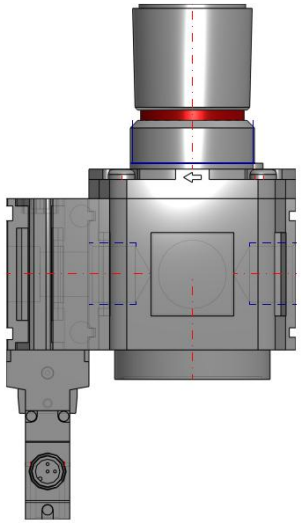

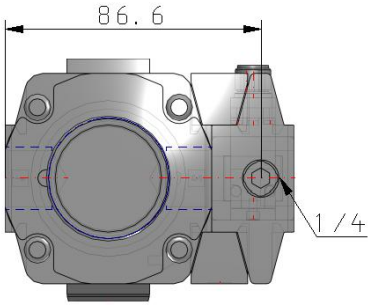

Specifications are subject to change without prior notice and any obligation on the part of the manufacturer.

SMC CORPORATION Zuazobidea 14, 01012, Vitoria-Gasteiz, Álava +34 945184100 +34 945184126 www.smc.eu support.marketingeurope@smc.com

Additional information

Catalogue	AMS-Da_EU.pdf
Operation manuals	OM_ARxS_DOC1018957EN-2.pdf

Specifications are subject to change without prior notice and any obligation on the part of the manufacturer.

SMC CORPORATION Zuazobidea 14, 01012, Vitoria-Gasteiz, Álava +34 945184100 +34 945184126 www.smc.eu support.marketingeurope@smc.com