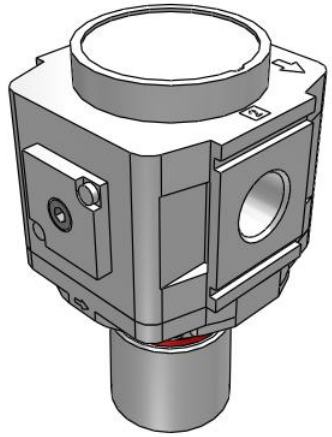

AR20-D to AR60-D, Regulator
AR40K-F04-D

Datasheet

General series information

- ISO 8573-1:2010 compliant
- Up to 0.85 MPa set pressure
- Maximum flow rate up to 20000 l/min (ANR, 0.7MPa).

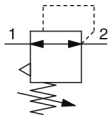

Regulator with Backflow Function

Standard specifications

Options	w/o Mounting Option
Pressure Units	Standard (Name Plate, Caution Plate for Bowl, and Pressure Gauge: MPa)
Set Pressure	0.05 to 0.85 MPa Setting
Body Size	40
Knob	Downward
Port Size	04 (1/2)
Exhaust Mechanism	Relieving
Backflow Function	K (w/Backflow Function)
Flow Direction	Left to Right
Thread	F (G)
Construction	Relieving type
Pressure medium	Air
Maximum temperature of pressure medium	60 °C
Minimum temperature of pressure medium	-5 °C (with no freezing)
Maximum operating pressure	1.0 MPa
Proof pressure	1.5 MPa
Maximum ambient temperature	60 °C
Minimum ambient temperature	-5 °C (with no freezing)
Weight	0.473 Kg

Specifications are subject to change without prior notice and any obligation on the part of the manufacturer.

SMC United Kingdom +34 945184126 sales@smc.uk

Dimensions

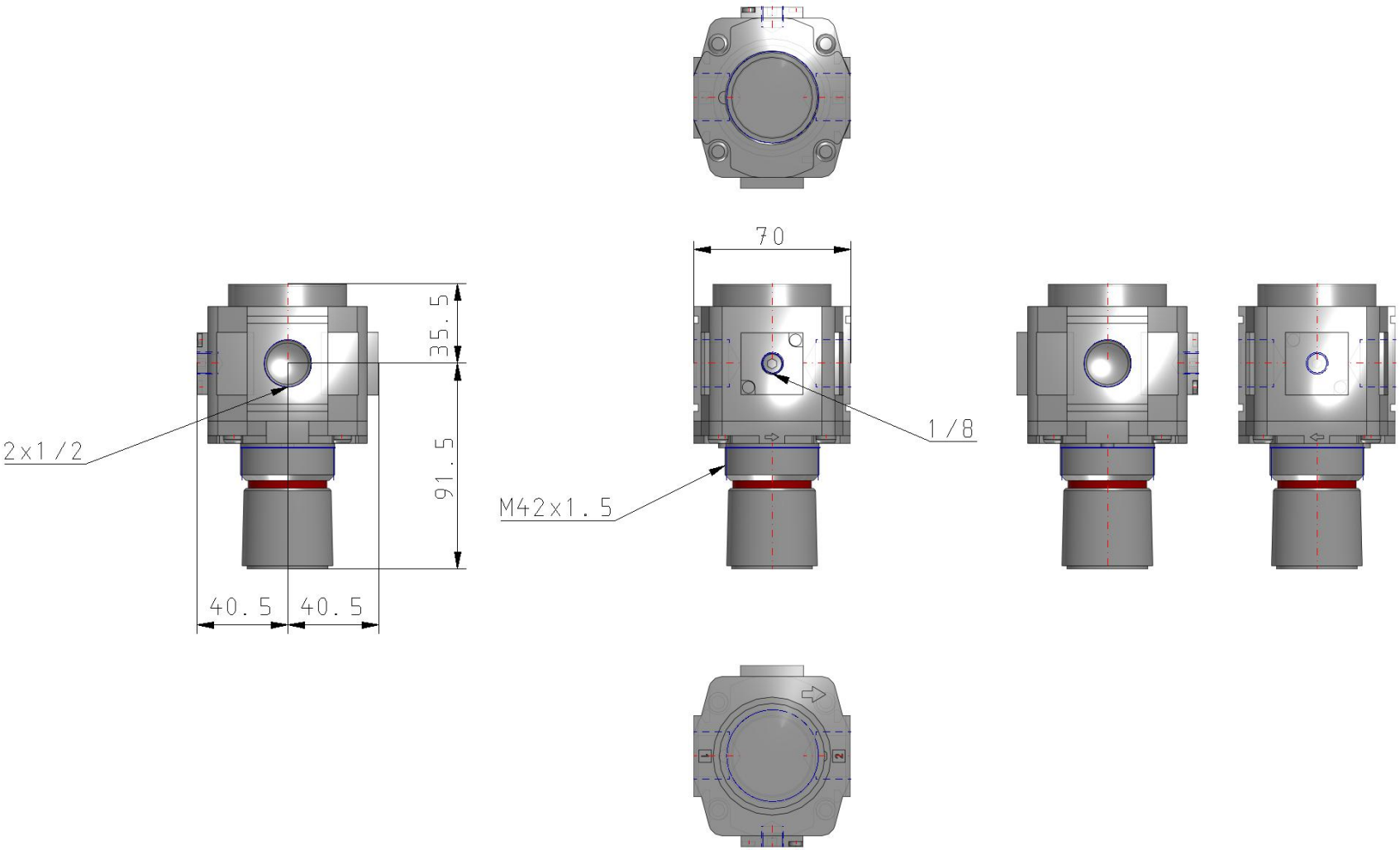

Specifications are subject to change without prior notice and any obligation on the part of the manufacturer.

Additional information

Catalogue	AC-D-D_EU.pdf
Installation manuals	IM_ARx-D_TF2Z352EN.pdf
Operation manuals	OM_AR-D_OMX0055EN-B.pdf

Specifications are subject to change without prior notice and any obligation on the part of the manufacturer.

SMC United Kingdom +34 945184126 sales@smc.uk