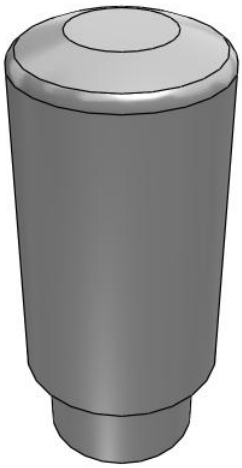

AN05 to 40, Silencer, Compact Resin Type, Male Thread

AN05-M5

Datasheet

General series information

- Space saving.
- Noise reduction improved: 30 dB(A).
- M thread, R (NPT) thread type.

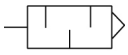

Silencer

Standard specifications

Thread Connection Port Size	M5 (M5 x 0.8)
Body Size	05
Thread Type	Rc or Metric
Pressure medium	Compressed Air
Maximum ambient temperature	60 °C
Maximum ambient temperature with magnet	5 °C
Noise reduction	30 dB
Effective Area	5 mm²
Weight	0.001 Kg

Specifications are subject to change without prior notice and any obligation on the part of the manufacturer.

SMC United Kingdom +34 945184126 sales@smc.uk

Dimensions

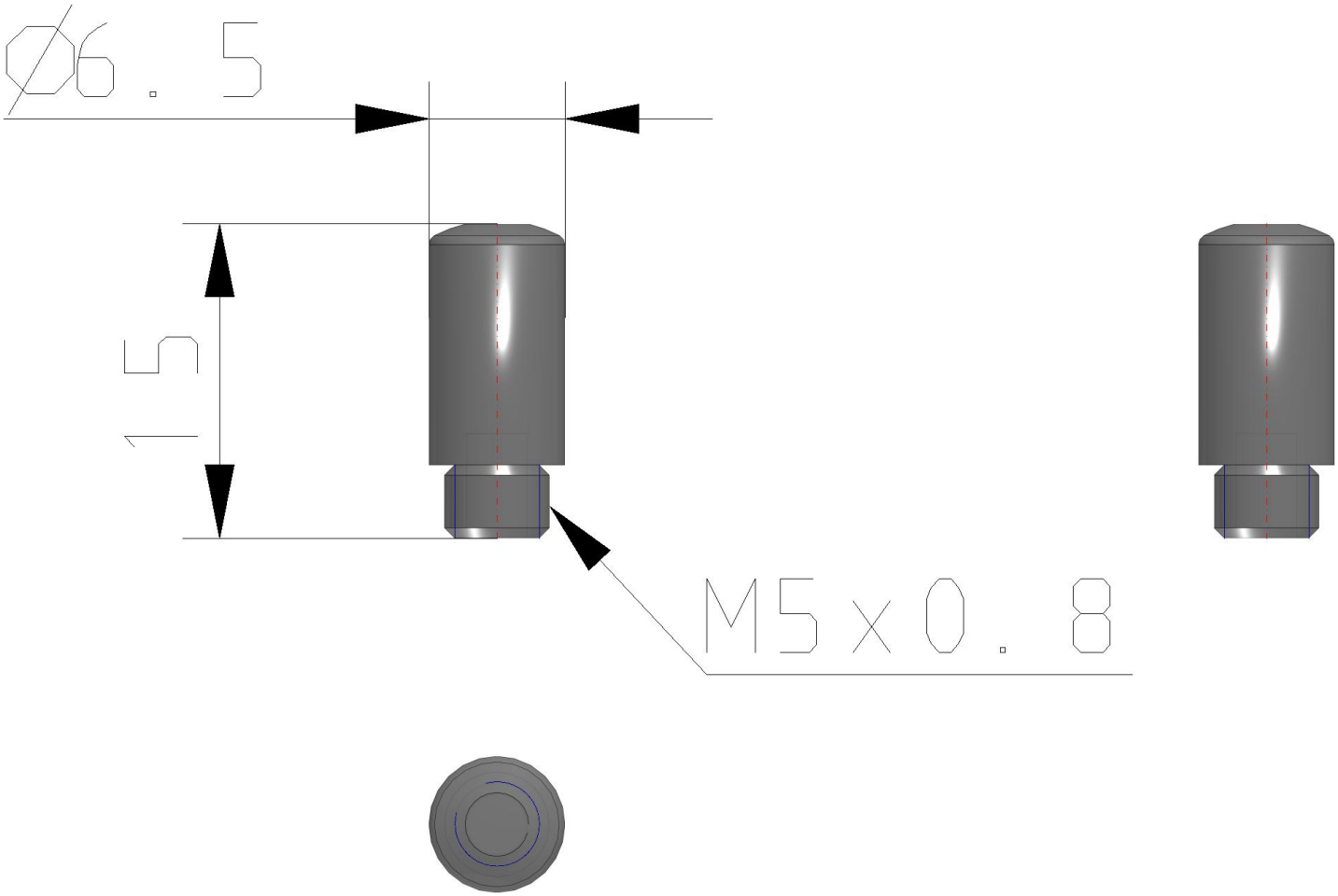

Specifications are subject to change without prior notice and any obligation on the part of the manufacturer.

SMC United Kingdom +34 945184126 sales@smc.uk

Additional information

Catalogue	AN-A_EU.pdf

Specifications are subject to change without prior notice and any obligation on the part of the manufacturer.

SMC United Kingdom +34 945184126 sales@smc.uk