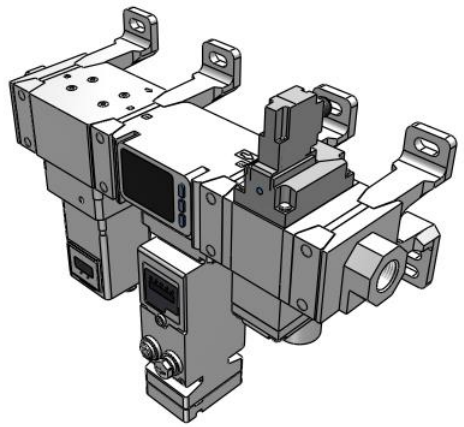

Air Management System, Electro-Pneumatic Regulator Type – AMS20/30/40/60-A

AMS40A-F04C-EN-KLG

Datasheet

General series information

- Programmable standby and isolation modes
- Flow rate, pressure and temperature monitoring
- Compatible with wireless systems
- Flow rate up to 4000 l/min at 0.7 MPa
- Port sizes: 1/8, 1/4, 3/8, 1/2, 3/4, 1
- Modular connection.

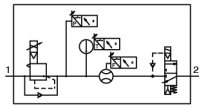

Air management system with electro-pneumatic regulator, normally closed

Standard specifications

Body Size	40
Thread Type	F (G)
Port Size	04 (1/2)
N.O./N.C.	C [N.C. (Normally Closed)]
Protocol	EN [EtherNet/IP™, OPC UA (When Wireless Adapter is Connected: Wireless Base)]
Units	K (Units Selection Function)
Manual Override	G (Non-locking Push Type)
Pressure medium	Air
Maximum temperature of pressure medium	50 °C
Minimum temperature of pressure medium	0 °C
Proof pressure	1.0 MPa
Maximum ambient temperature	50 °C
Minimum ambient temperature	0 °C
General power supply	24 VDC ±10 %
Conform to the European RoHS Directive	Conform
Approvals	CE, UKCA

Specifications are subject to change without prior notice and any obligation on the part of the manufacturer.

SMC CORPORATION Zuazobidea 14, 01012, Vitoria-Gasteiz, Álava +34 945184100 +34 945184126 www.smc.eu support.marketingeurope@smc.com

Protection class without connector	IP65
Current consumption	500 mA
Max. Flow rate (l/min (ANR))	2000 l/min
Max. supply pressure	0.8 MPa
Min. supply pressure	0.3 MPa
F414 - Input/Output	DI x2 DI, DO IO-link, DI

Specifications are subject to change without prior notice and any obligation on the part of the manufacturer.

SMC CORPORATION Zuazobidea 14, 01012, Vitoria-Gasteiz, Álava +34 945184100 +34 945184126 www.smc.eu support.marketingeurope@smc.com

Dimensions

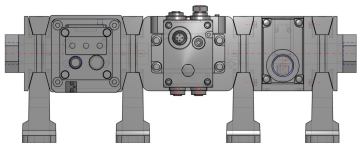

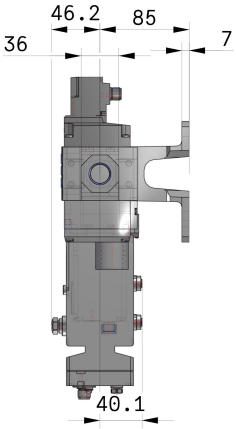

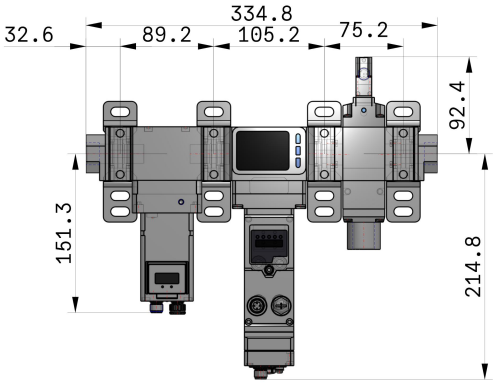

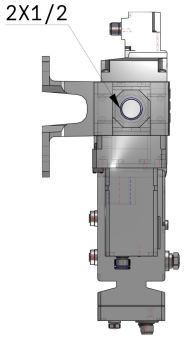

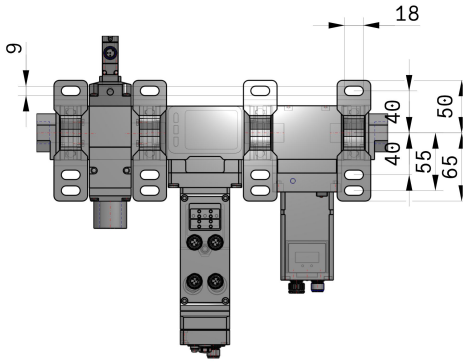

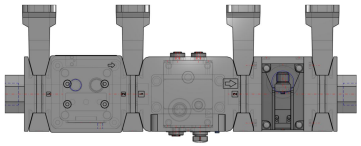

Specifications are subject to change without prior notice and any obligation on the part of the manufacturer.

SMC CORPORATION Zuazobidea 14, 01012, Vitoria-Gasteiz, Álava +34 945184100 +34 945184126 www.smc.eu support.marketingeurope@smc.com

Additional information

Catalogue	AMS-Da_EU.pdf
Declaration of conformity	newDoC_AMS20-30-40-60_TF125-177EN.pdf newDoC_PF_TF122129EN.pdf
Installation manuals	IM_AMS_TF223-005EN-A.pdf IM_EXA1_TF222-139EN-B.pdf IM_EXW1-A11N-X1_TF222-092EN-A.pdf
Operation manuals	AMS_Guide_for_Machine_Retrofitting.pdf OM_AMS_20-30-40-60_OMA1007EN-G.pdf

Specifications are subject to change without prior notice and any obligation on the part of the manufacturer.

SMC CORPORATION Zuazobidea 14, 01012, Vitoria-Gasteiz, Álava +34 945184100 +34 945184126 www.smc.eu support.marketingeurope@smc.com