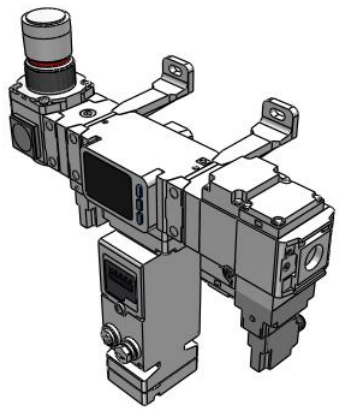

Air Management System, Regulator Type – AMS20/30/40/60-B

AMS30B-F00D-PN-KLG

Datasheet

General series information

- Programmable standby and isolation modes
- Flow rate, pressure and temperature monitoring
- Compatible with wireless systems
- Flow rate up to 4000 l/min at 0.7 MPa
- Port sizes: 1/8, 1/4, 3/8, 1/2, 3/4, 1
- Modular connection.

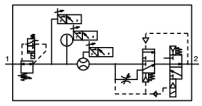

Air management system with regulator, normally open

Standard specifications

Body Size	30
Thread Type	F (G)
Port Size	00 (Without Attachments)
N.O./N.C.	D [N.O. (Normally Open)]
Protocol	PN [PROFINET, OPC UA (When Wireless Adapter is Connected: Wireless Base)]
Units	K (Units Selection Function)
Manual Override	G (Non-locking Push Type)
Pressure medium	Air;Air
Maximum temperature of pressure medium	50 °C;50 °C
Minimum temperature of pressure medium	0 °C;0 °C
Proof pressure	1.0 MPa
Maximum ambient temperature	50 °C;50 °C
Minimum ambient temperature	0 °C;0 °C
General power supply	24 VDC ±10 %;24 VDC ±10 %
Approvals	CE, UKCA;CE, UKCA
Protection class without connector	IP65;IP65

Specifications are subject to change without prior notice and any obligation on the part of the manufacturer.

SMC CORPORATION Zuazobidea 14, 01012, Vitoria-Gasteiz, Álava +34 945184100 +34 945184126 www.smc.eu support.marketingeurope@smc.com

Current consumption	400 mA
Max. Flow rate (l/min (ANR))	1000 l/min
Max. supply pressure	0.7 MPa
Min. supply pressure	0.3 MPa
F414 - Input/Output	DI x2 DI, DO IO-link, DI

Specifications are subject to change without prior notice and any obligation on the part of the manufacturer.

SMC CORPORATION Zuazobidea 14, 01012, Vitoria-Gasteiz, Álava +34 945184100 +34 945184126 www.smc.eu support.marketingeurope@smc.com

Dimensions

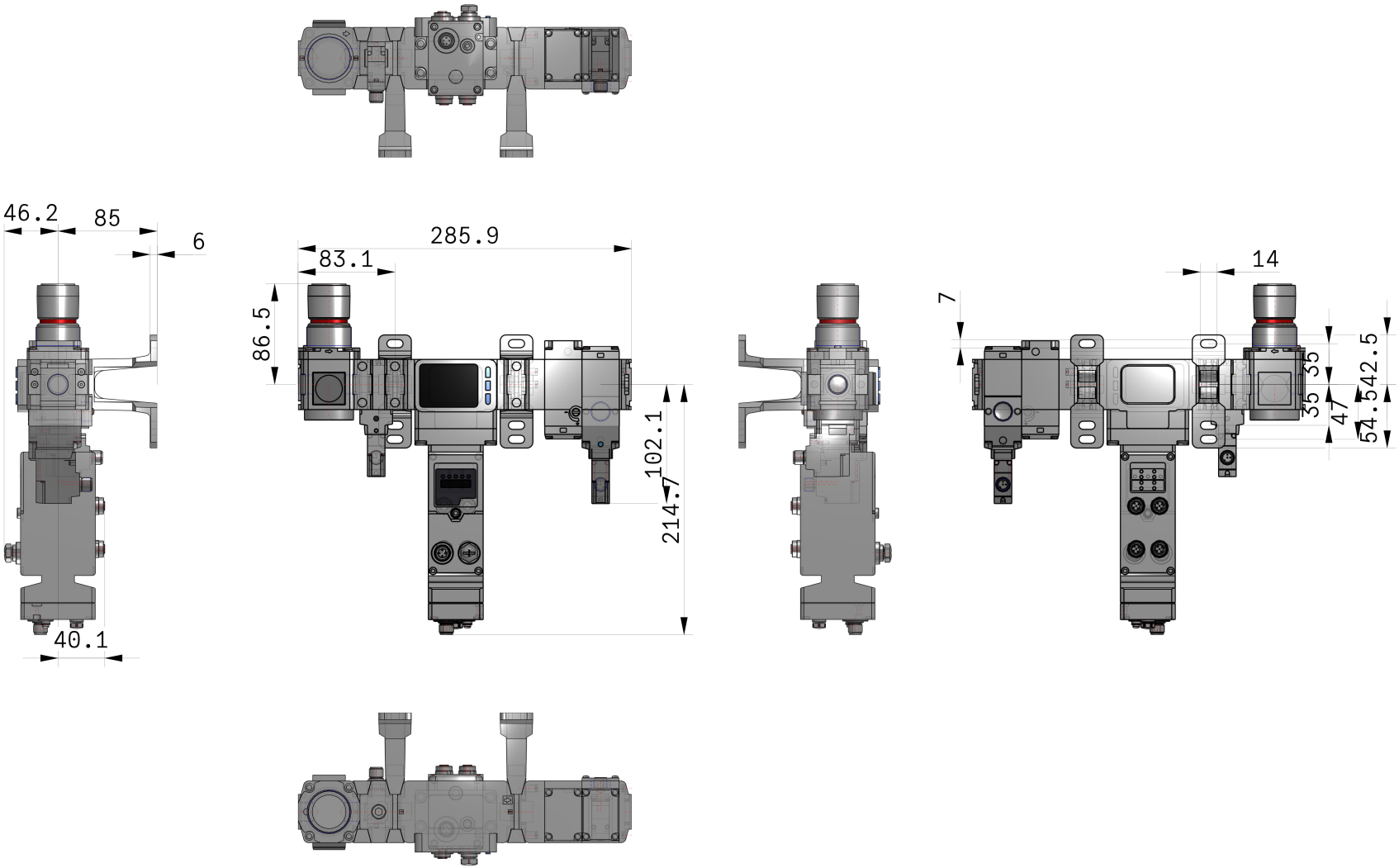

Specifications are subject to change without prior notice and any obligation on the part of the manufacturer.

SMC CORPORATION Zuazobidea 14, 01012, Vitoria-Gasteiz, Álava +34 945184100 +34 945184126 www.smc.eu support.marketingeurope@smc.com

Additional information

Catalogue	AMS-Da_EU.pdf
Declaration of conformity	newDoC_AMS20-30-40-60_TF125-177EN.pdf newDoC_PF_TF122129EN.pdf
Installation manuals	IM_AMS_TF223-005EN-A.pdf IM_EXA1_TF222-139EN-B.pdf IM_EXW1-A11N-X1_TF222-092EN-A.pdf
Operation manuals	AMS_Guide_for_Machine_Retrofitting.pdf OM_AMS_20-30-40-60_OMA1007EN-G.pdf

Specifications are subject to change without prior notice and any obligation on the part of the manufacturer.

SMC CORPORATION Zuazobidea 14, 01012, Vitoria-Gasteiz, Álava +34 945184100 +34 945184126 www.smc.eu support.marketingeurope@smc.com