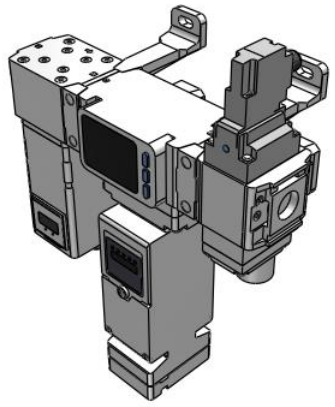

# Air Management System, Electro-Pneumatic Regulator Type – AMS20/30/40/60-A

## AMS30A-H00C-SA-KLG

Datasheet

## General series information

- Programmable standby and isolation modes
- Flow rate, pressure and temperature monitoring
- Compatible with wireless systems
- Flow rate up to 4000 l/min at 0.7 MPa
- Port sizes: 1/8, 1/4, 3/8, 1/2, 3/4, 1
- Modular connection.

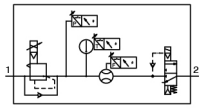


*Air management system with electro-pneumatic regulator, normally closed*

## Standard specifications

| | |
|---|---|
| Body Size | 30 |
| Thread Type | H (Without Attachments) |
| Port Size | 00 (Without Attachments) |
| N.O./N.C. | C [N.C. (Normally Closed)] |
| Protocol | SA [Standalone (When Wireless Adapter is Connected: Wireless Remote)] |
| Units | K (Units Selection Function) |
| Manual Override | G (Non-locking Push Type) |
| Pressure medium | Air |
| Maximum temperature of pressure medium | 50 °C |
| Minimum temperature of pressure medium | 0 °C |
| Proof pressure | 1.0 MPa |
| Maximum ambient temperature | 50 °C |
| Minimum ambient temperature | 0 °C |
| General power supply | 24 VDC ±10 % |
| Conform to the European RoHS Directive | Conform |
| Approvals | CE, UKCA |

Specifications are subject to change without prior notice and any obligation on the part of the manufacturer.



SMC CORPORATION Zuazobidea 14, 01012, Vitoria-Gasteiz, Álava +34 945184100 +34 945184126 www.smc.eu support.marketingeurope@smc.com

| | |
|---|---|
| Protection class without connector | IP65 |
| Current consumption | 500 mA |
| Max. Flow rate (l/min (ANR)) | 1000 l/min |
| Max. supply pressure | 0.8 MPa |
| Min. supply pressure | 0.3 MPa |
| F414 - Input/Output | DI x2 DI, DO IO-link, DI |
| Weight | 2.500 Kg |

Specifications are subject to change without prior notice and any obligation on the part of the manufacturer.



SMC CORPORATION Zuazobidea 14, 01012, Vitoria-Gasteiz, Álava +34 945184100 +34 945184126 www.smc.eu support.marketingeurope@smc.com

# Dimensions

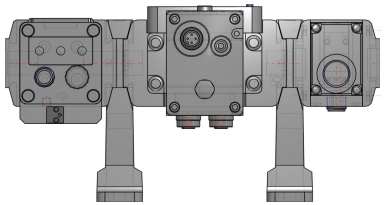

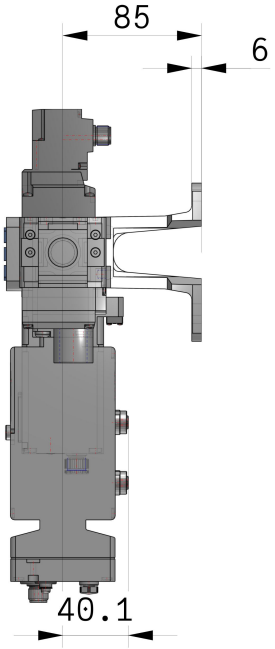


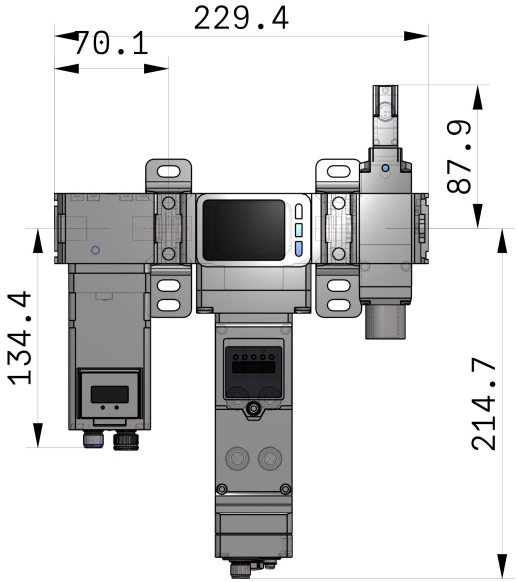


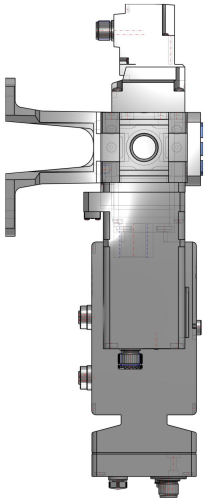

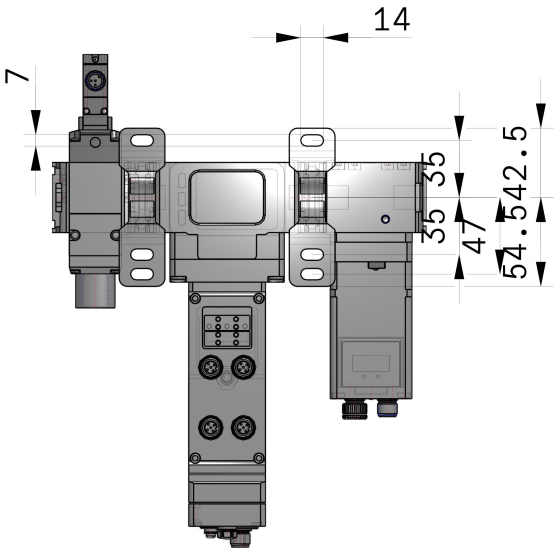


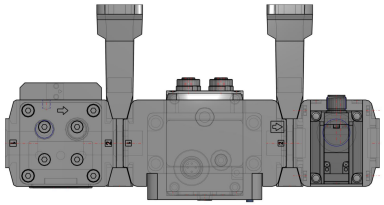

Specifications are subject to change without prior notice and any obligation on the part of the manufacturer.



SMC CORPORATION Zuazobidea 14, 01012, Vitoria-Gasteiz, Álava +34 945184100 +34 945184126 www.smc.eu support.marketingeurope@smc.com

# Additional information

| | |
|---|---|
| Catalogue | AMS-Da_EU.pdf |
| Declaration of conformity | newDoC_PF_TF122129EN.pdf |
| Installation manuals | IM_AMS_TF223-005EN-A.pdf<br>IM_EXA1_TF222-139EN-B.pdf<br>IM_EXW1-A11N-X1_TF222-092EN-A.pdf |
| Operation manuals | AMS_Guide_for_Machine_Retrofitting.pdf<br>OM_AMS_20-30-40-60_OMA1007EN-G.pdf |

Specifications are subject to change without prior notice and any obligation on the part of the manufacturer.



SMC CORPORATION Zuazobidea 14, 01012, Vitoria-Gasteiz, Álava +34 945184100 +34 945184126 www.smc.eu support.marketingeurope@smc.com