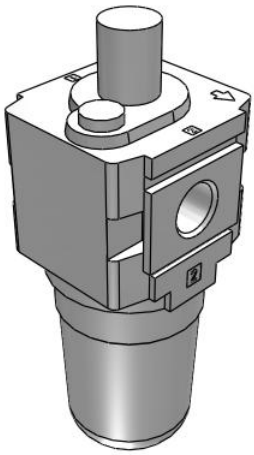

AL20-D to AL60-D, Lubricator
AL40-F02-D

Datasheet

General series information

- Maximum flow rate up to 15000 l/min (ANR, 0.7MPa).

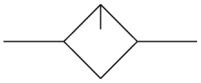

Lubricator

Standard specifications

Body Size	40
Thread	F (G)
Port Size	02 (1/4)
Mounting	w/o Mounting Option
Bowl/Lubricant exhaust port/Flow direction	Polycarbonate Bowl
Pressure Unit	MPa, °C
Pressure medium	Air;Air
Maximum temperature of pressure medium	60 ºC;60 ºC
Minimum temperature of pressure medium	-5 °C (with no freezing);-5 °C (with no freezing)
Maximum operating pressure	1.0 MPa
Minimum operating pressure	0.05 MPa
Proof pressure	1.5 MPa
Conform to the European RoHS Directive	Conform
Oil capacity	135 cm³
Max. Flow rate (inlet pressure = 1.0 MPa)	8000 l/min
MIN_DRIPPING_FLOW	30 l/min
RECOMMENDED_LUBRICANT	Class 1 turbine oil (ISO VG32)
Weight	0.398 Kg

Specifications are subject to change without prior notice and any obligation on the part of the manufacturer.

SMC CORPORATION Zuazobidea 14, 01012, Vitoria-Gasteiz, Álava +34 945184100 +34 945184126 www.smc.eu emcmarketing@smc.smces.es

Dimensions

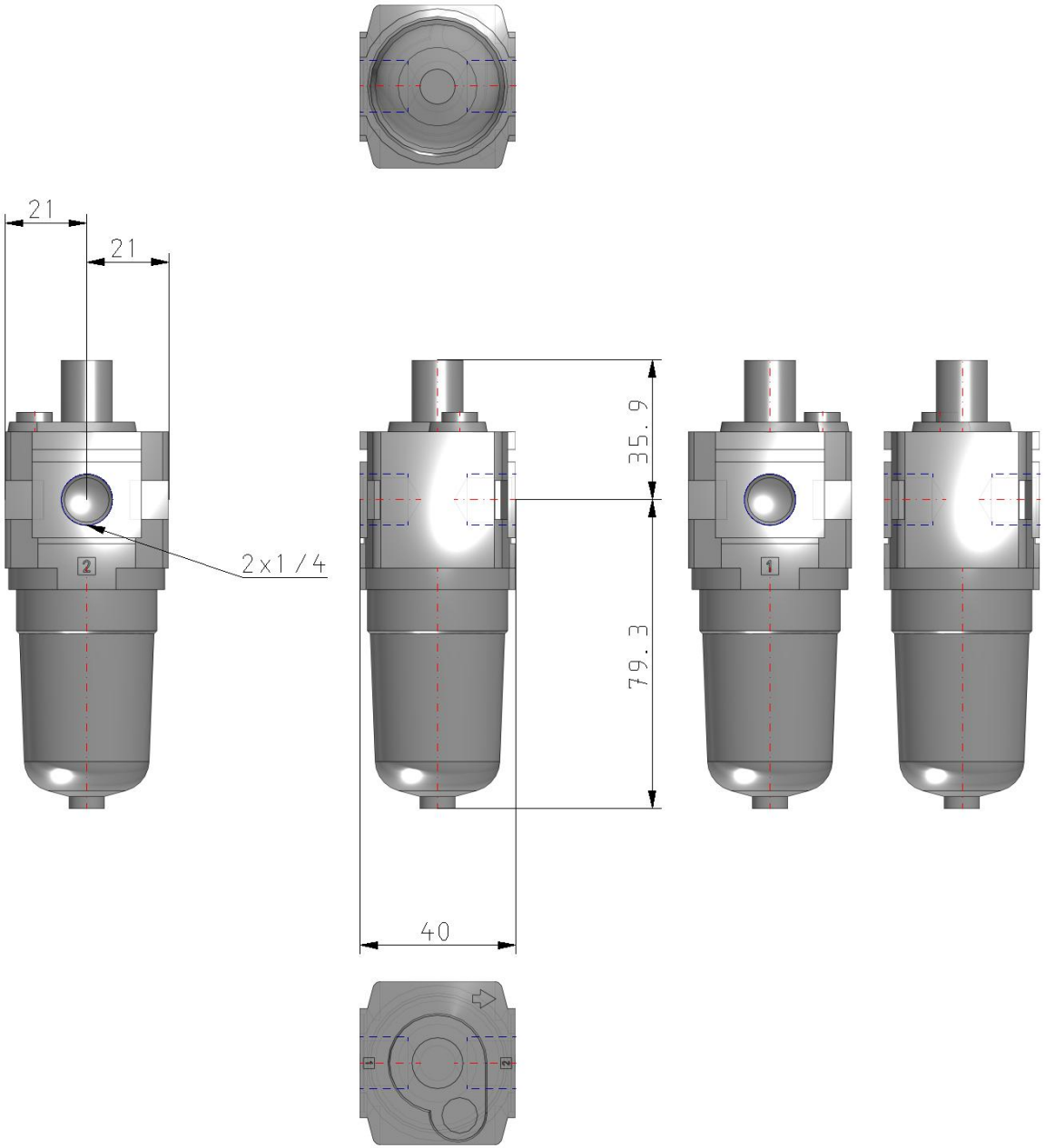

Specifications are subject to change without prior notice and any obligation on the part of the manufacturer.

SMC CORPORATION Zuazobidea 14, 01012, Vitoria-Gasteiz, Álava +34 945184100 +34 945184126 www.smc.eu emcmarketing@smc.smces.es

Additional information

Catalogue	ACD-D_EU.pdf
Operation manuals	OM_AL20-60-D_OMX0056EN-B.pdf

Specifications are subject to change without prior notice and any obligation on the part of the manufacturer.

SMC CORPORATION Zuazobidea 14, 01012, Vitoria-Gasteiz, Álava +34 945184100 +34 945184126 www.smc.eu emcmarketing@smc.smces.es