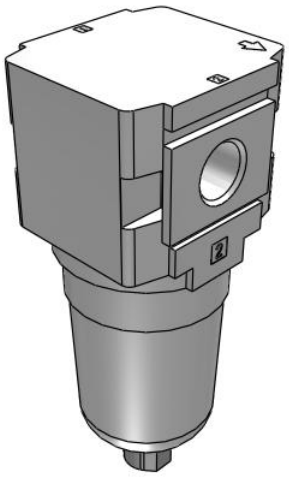

# AFM20-D to AFM40-D, Mist Separator

## AFM30-F02-D

Datasheet

## General series information

- ISO 8573-1:2010 compliant
- Nominal filtration rating 0.3 µm
- Maximum flow rate up to 1100 l/min (ANR, 0.7MPa).

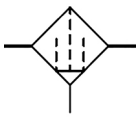

*Mist reparator*

## Standard specifications

| | |
|---|---|
| Body Size | 30 |
| Thread | F (G) |
| Port Size | 02 (1/4) |
| Mounting | w/o Mounting Option |
| Float type auto drain | Without Auto drain |
| Bowl type | Polycarbonate Bowl |
| Drain Port | Standard |
| Indicator | w/o Indicator |
| Flow Direction | Left to Right |
| Drain Cock w/Barb Fitting | None |
| Pressure Unit | Name Plate and Pressure Gauge: MPa |
| Air purity class | [3:7:3] |
| Pressure medium | Air |
| Maximum temperature of pressure medium | 60 ºC |
| Minimum temperature of pressure medium | -5 ºC (with no freezing) |
| Maximum operating pressure | 1.0 MPa |
| Proof pressure | 1.5 MPa |
| Maximum ambient temperature | 60 ºC |
| Minimum ambient temperature | -5 ºC (with no freezing) |
| Conform to the European RoHS Directive | Conform |

*Specifications are subject to change without prior notice and any obligation on the part of the manufacturer.*



**SMC CORPORATION** Zuazobidea 14, 01012, Vitoria-Gasteiz, Álava +34 945184100 +34 945184126 www.smc.eu emcmarketing@smc.smces.es

| | |
|---|---|
| Approvals | No need |
| Bowl Material | Polycarbonate |
| Bowl Guard | Polycarbonate |
| Drain Capacity | 25 $cm^3$ |
| Element nominal filtration rating | 0.3 µm |
| ISO 8573 compliant | Yes |
| Max. Flow rate (inlet pressure = 1.0 MPa) | 638 l/min |
| Weight | 0.187 Kg |

Specifications are subject to change without prior notice and any obligation on the part of the manufacturer.



SMC CORPORATION Zuazobidea 14, 01012, Vitoria-Gasteiz, Álava +34 945184100 +34 945184126 www.smc.eu emcmarketing@smc.smces.es

# Dimensions

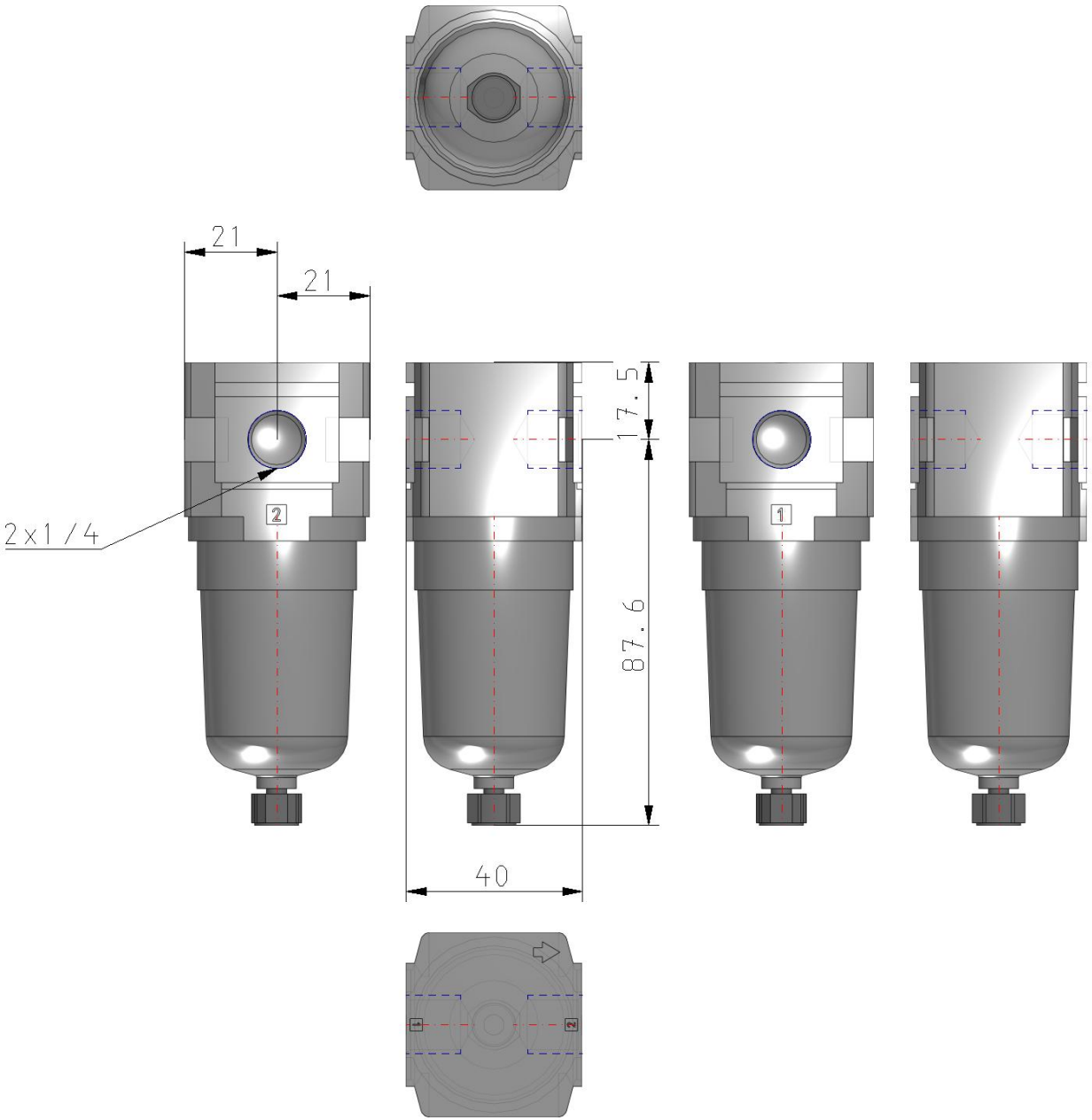


Specifications are subject to change without prior notice and any obligation on the part of the manufacturer.



**SMC CORPORATION** Zuazobidea 14, 01012, Vitoria-Gasteiz, Álava +34 945184100 +34 945184126 www.smc.eu emcmarketing@smc.smces.es

## Additional information

| | |
|---|---|
| Catalogue | ACD-D_EU.pdf |
| Operation manuals | OM_AFM-D_OMX0053EN-D.pdf |

Specifications are subject to change without prior notice and any obligation on the part of the manufacturer.



SMC CORPORATION Zuazobidea 14, 01012, Vitoria-Gasteiz, Álava +34 945184100 +34 945184126 www.smc.eu emcmarketing@smc.smces.es