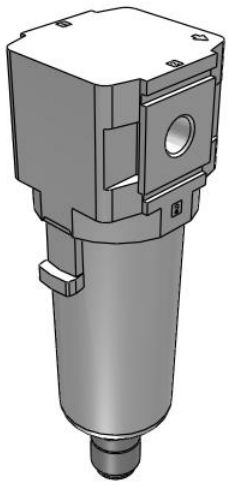

AF20-D to AF60-D, Air Filter
AF30-F02D-D

Datasheet

General series information

- ISO 8573-1:2010 compliant
- Nominal filtration rating 5 µm
- Maximum flow rate up to 12500 l/min (ANR, 0.7MPa).

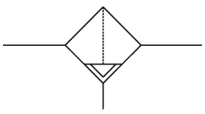

Filter with automatic drain

Standard specifications

Body Size	30
Thread	F (G)
Port Size	02 (1/4)
Mounting	Standard
Float type auto drain	D [Float Type Auto Drain (N.O.)]
Bowl type	Standard (Polycarbonate Bowl)
Drain Port	Standard
Flow Direction	Left to Right
Drain Cock w/Barb Fitting	None
Pressure Unit	Name Plate and Pressure Gauge: MPa
Air purity class	[6:8:4]
Pressure medium	Air
Maximum temperature of pressure medium	60 ºC
Minimum temperature of pressure medium	-5 °C (with no freezing)
Maximum operating pressure	1.0 MPa
Minimum operating pressure	0.05 MPa
Proof pressure	1.5 MPa
Maximum ambient temperature	60 ºC
Minimum ambient temperature	-5 °C (with no freezing)
Conform to the European RoHS Directive	Conform

Specifications are subject to change without prior notice and any obligation on the part of the manufacturer.

SMC CORPORATION Zuazobidea 14, 01012, Vitoria-Gasteiz, Álava +34 945184100 +34 945184126 www.smc.eu emcmarketing@smc.smces.es

Bowl Material	Polycarbonate
Bowl Guard	Polycarbonate
Drain Capacity	8 cm^3
Element nominal filtration rating	5 µm
ISO 8573 compliant	Yes
Max. Flow rate (inlet pressure = 1.0 MPa)	4000 l/min
Weight	0.217 Kg

Specifications are subject to change without prior notice and any obligation on the part of the manufacturer.

SMC CORPORATION Zuazobidea 14, 01012, Vitoria-Gasteiz, Álava +34 945184100 +34 945184126 www.smc.eu emcmarketing@smc.smces.es

Dimensions

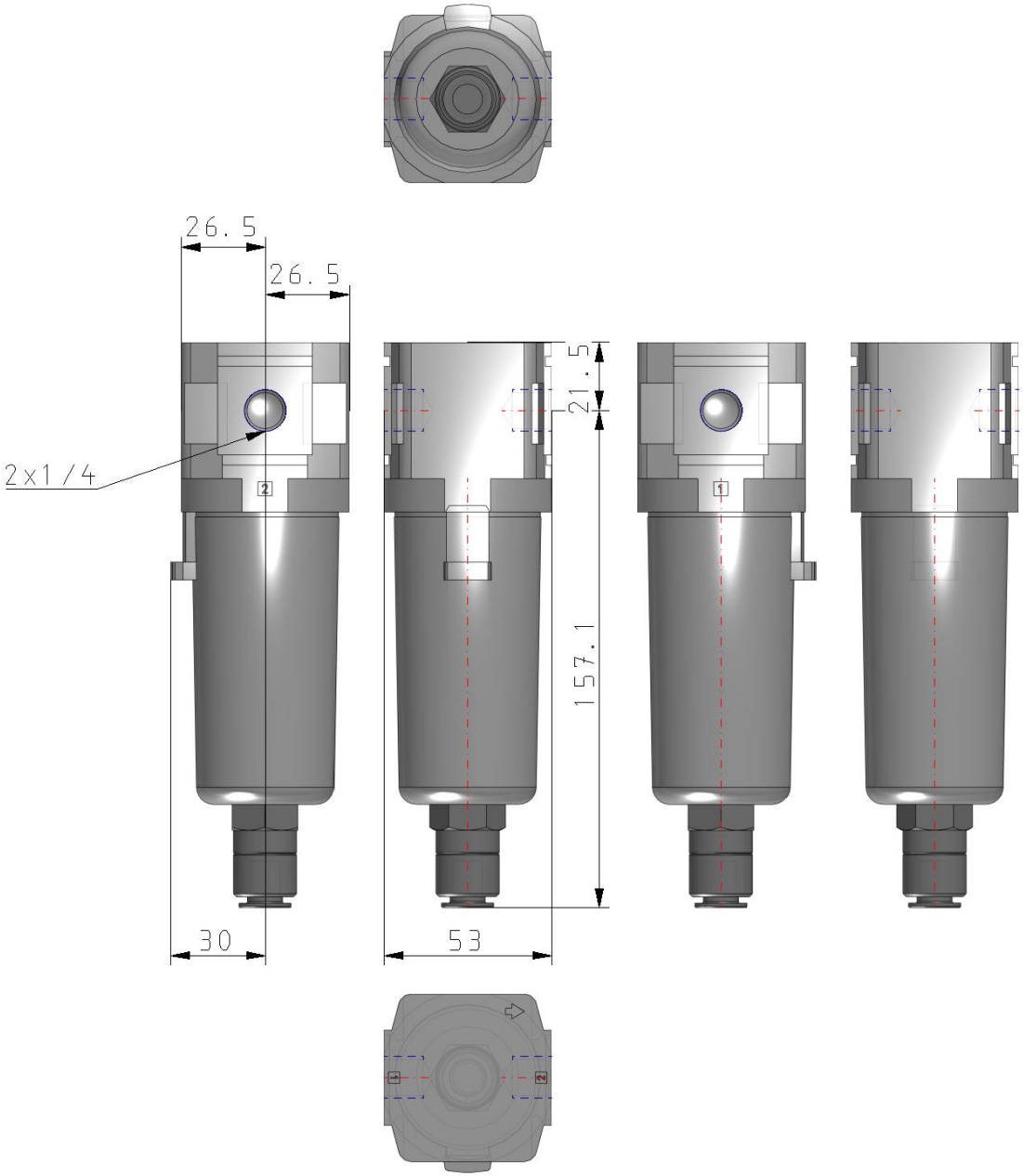

Specifications are subject to change without prior notice and any obligation on the part of the manufacturer.

SMC CORPORATION Zuazobidea 14, 01012, Vitoria-Gasteiz, Álava +34 945184100 +34 945184126 www.smc.eu emcmarketing@smc.smces.es

Additional information

Catalogue	ACD-D_EU.pdf
Operation manuals	OM_AF20-60-D_OMX0052EN-D.pdf

Specifications are subject to change without prior notice and any obligation on the part of the manufacturer.

SMC CORPORATION Zuazobidea 14, 01012, Vitoria-Gasteiz, Álava +34 945184100 +34 945184126 www.smc.eu emcmarketing@smc.smces.es