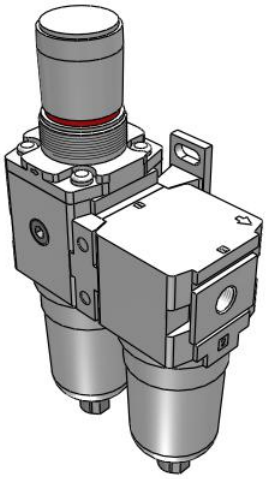

AC20D-D to AC60D-D Filter Regulator + Mist Separator

AC20D-F01-D

Datasheet

General series information

- ISO 8573-1:2010 compliant
- Port Size: 1/8, 1/4, 3/8, 1/2, 3/4, 1
- Body size: 20, 30, 40, 50, 60.

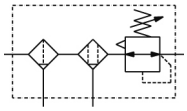

Air combination, air filter, mist separator and regulator

Standard specifications

Body Size	20
Thread	F (G)
Port	01 (1/8)
Float type auto drain	Without Auto drain
Pressure gauge / Digital pressure switch	Without Pressure Gauge
Residual Pressure Relief 3 Port Valve	Without Attachment
Set pressure	Standard (0.05 to 0.85 MPa)
Bowl type	Standard (Polycarbonate Bowl)
Filter Regulator Drain Port	Standard
Exhaust Mechanism	Relieving
Flow Direction	Standard (Flow Direction: Left->Right)
Drain Cock w/Barb Fitting	Without Barb Fitting
Pressure Units	Standard (Name Plate, Caution Plate for Bowl, and Pressure Gauge: MPa)
Pressure medium	Air
Maximum temperature of pressure medium	60 ºC
Minimum temperature of pressure medium	-5 °C (with no freezing)
Maximum operating pressure	1.0 MPa
Proof pressure	1.5 MPa
Maximum ambient temperature	60 ºC

Specifications are subject to change without prior notice and any obligation on the part of the manufacturer.

SMC CORPORATION Zuazobidea 14, 01012, Vitoria-Gasteiz, Álava +34 945184100 +34 945184126 www.smc.eu support.marketingeurope@smc.com

Minimum ambient temperature	-5 °C (with no freezing)
Conform to the European RoHS Directive	Conform
Approvals	No need
Grade of filtration	0.3 µm
Drain Capacity	8 cm^3
Max. Flow rate (inlet pressure = 1.0 MPa)	200 l/min
Weight	0.320 Kg

Specifications are subject to change without prior notice and any obligation on the part of the manufacturer.

SMC CORPORATION Zuazobidea 14, 01012, Vitoria-Gasteiz, Álava +34 945184100 +34 945184126 www.smc.eu support.marketingeurope@smc.com

Dimensions

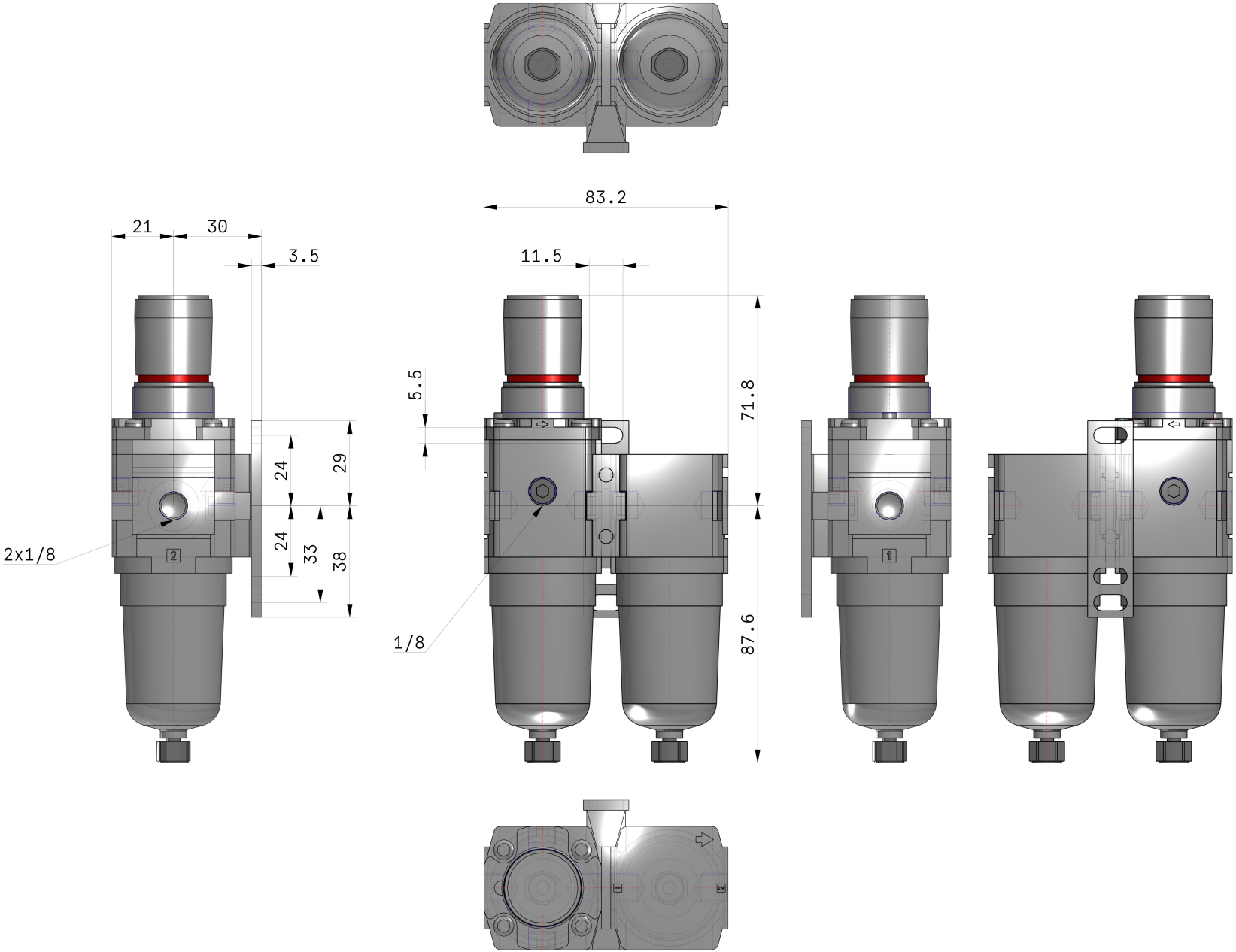

Specifications are subject to change without prior notice and any obligation on the part of the manufacturer.

SMC CORPORATION Zuazobidea 14, 01012, Vitoria-Gasteiz, Álava +34 945184100 +34 945184126 www.smc.eu support.marketingeurope@smc.com

Additional information

Catalogue ACD-C_EU.pdf

Specifications are subject to change without prior notice and any obligation on the part of the manufacturer.

SMC CORPORATION Zuazobidea 14, 01012, Vitoria-Gasteiz, Álava +34 945184100 +34 945184126 www.smc.eu support.marketingeurope@smc.com